This drawing is confidential and must not be reproduced or used without the consent of EXM

Ce dessin est confidentiel et ne doit pas être reproduit ou utilisé sans le consentement de EXM

No.	Revisions	Date	By/Par

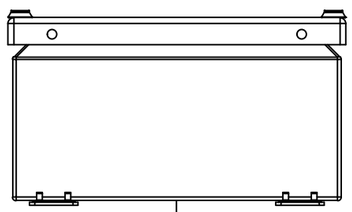

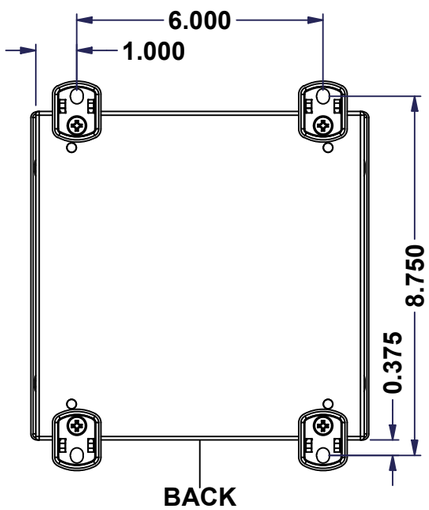

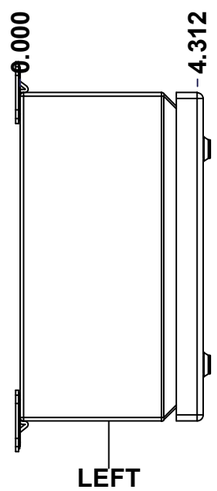

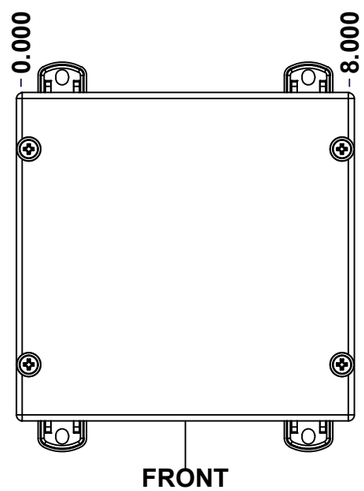

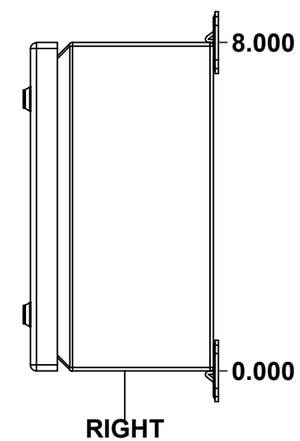

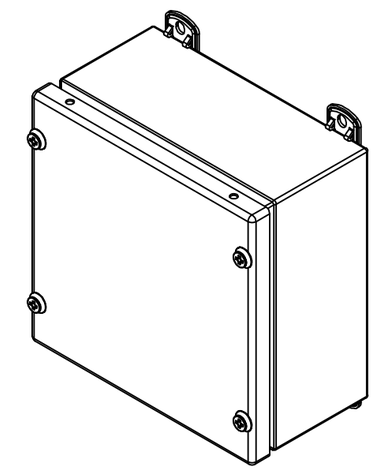

Isometric View

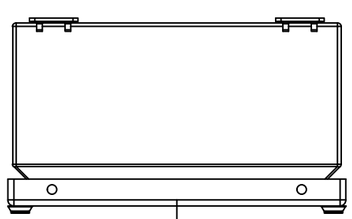

SEE BILL OF MATERIAL ON LAST PAGE

Tél: (450) 979-4373
Fax: (450) 979-4626
www.exmweb.com

Flatness / Aplatissement: Max 3.0mm

Projection

Customer / Client		Date	
Drawn By / Dessiné Par	BoxCad: BoxCad	Date	30-Oct-14
Material / Matière	Aluminum 5052-H32 (1.4mm)		
Color / Couleur	Asa-61 Grey	Finish / Fini	Smooth
Description	5412EALSC 8" x 8" x 4" Assembly	Detail Rev.	
Part Number / Numéro Pièce	**5412EALSC080804**	Rev. **0**	1 / 9

This drawing is confidential and must not be reproduced or used without the consent of EXM

Ce dessin est confidentiel et ne doit pas être reproduit ou utilisé sans le consentement de EXM

NOTE

ITEM	DESCRIPTION
1	NEMA 4X Enclosure (IP66)
2	C/W Standard ground standoffs on box and cover
3	W/O Standard door stiffener
4	C/W Standard inner panel (Included)
5	C/W Standard inner panel mounting standoffs
6	C/W 885 ESCHMF2 Mounting Feet (Installed)

No.	Revisions	Date	By/Par

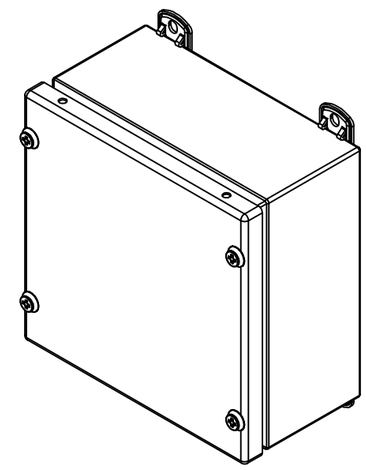

Isometric View

Tél: (450) 979-4373
Fax: (450) 979-4626
www.exmweb.com

Flatness / Aplatissement: Max 3.0mm

Projection

Customer / Client		Date	
Drawn By / Dessiné Par	BoxCad: BoxCad	Date	30-Oct-14
Material / Matière	Aluminum 5052-H32 (1.4mm)		
Color / Couleur	Asa-61 Grey	Finish / Fini	Smooth
Description	5412EALSC 8" x 8" x 4" Assembly	Detail Rev.	
Part Number / Numéro Pièce	**5412EALSC080804**	Rev. **0**	2 / 9

PACKING

ITEM	QTY	DESCRIPTION
STK-E-04308	1	CARTON 5412 ESCH080804
Plastic bag	1	To protect cover surface and inside gasket
Packaging label	1	White label with product number
STK-S-01100	1	ESCH EXM SQUARE STICKER

Parts List

Qty	Part Number	Rev	Description
1	5412EALSC080804C	0	5412EALSC 8" x 8" Cover
1	STK-K-02925	3	5412 ESSSC Accessory Kit
8	STK-Q-07210	0	Flange Lock Nut M6
1	880 SP0808G	0	880 SP0808G - Inner Panel
1	5412EALSC080804B	0	5412EALSC 8" x 8" x 4" Body

Tolerance ±1/32" unless otherwise specified

C:\Vault_Workspace\Inventor_Dwg\BoxCad\Result\5412EALSC080804\5412EALSC080804.idw

Tolérance ±1/32" sauf spécification contraire

This drawing is confidential and must not be reproduced or used without the consent of EXM

Ce dessin est confidentiel et ne doit pas être reproduit ou utilisé sans le consentement de EXM

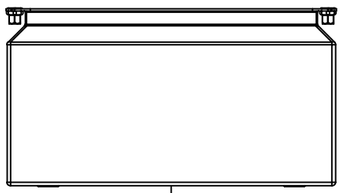

TOP

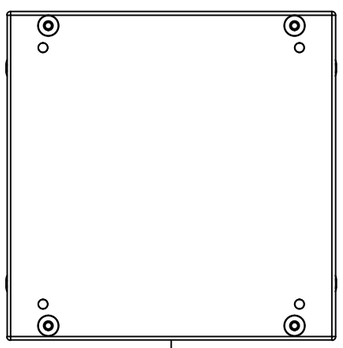

BACK

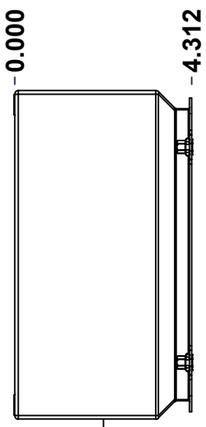

LEFT

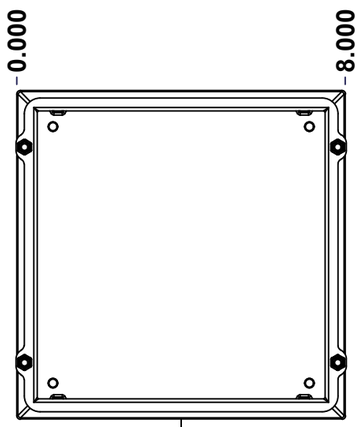

FRONT

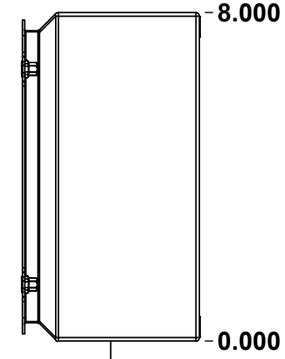

RIGHT

BOTTOM

SEE BILL OF MATERIAL ON LAST PAGE

No.	Revisions	Date	By/Par

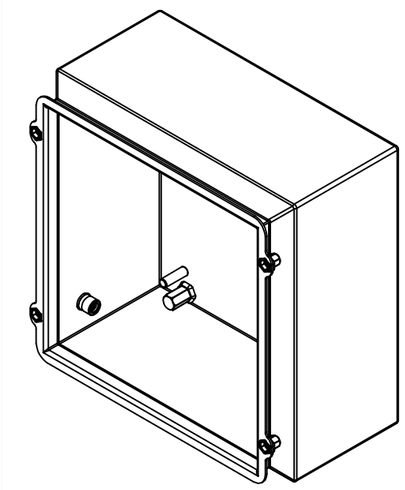

Isometric View

Tél: (450) 979-4373
Fax: (450) 979-4626
www.exmweb.com

Flatness / Aplatissement: Max 3.0mm

Projection

Customer / Client		Date	
Drawn By / Dessiné Par	BoxCad: BoxCad	Date	30-Oct-14
Material / Matière	Aluminum 5052-H32 (1.4mm)		
Color / Couleur	Asa-61 Grey	Finish / Fini	Smooth
Description	5412EALSC 8" x 8" x 4" Body	Detail Rev.	
Part Number / Numéro Pièce	**5412EALSC080804B**	Rev.	**0**

This drawing is confidential and must not be reproduced or used without the consent of EXM

Ce dessin est confidentiel et ne doit pas être reproduit ou utilisé sans le consentement de EXM

STANDARD FEATURES ARE NOT LISTED IN THIS HOLE TABLE

HOLE TABLE - LEFT VIEW (CUSTOM FEATURE ONLY)

CUT-OUT	XDIM	YDIM	DESCRIPTION
1	2.625	0.875	STANDOFF M6 x 10mm (Inside)

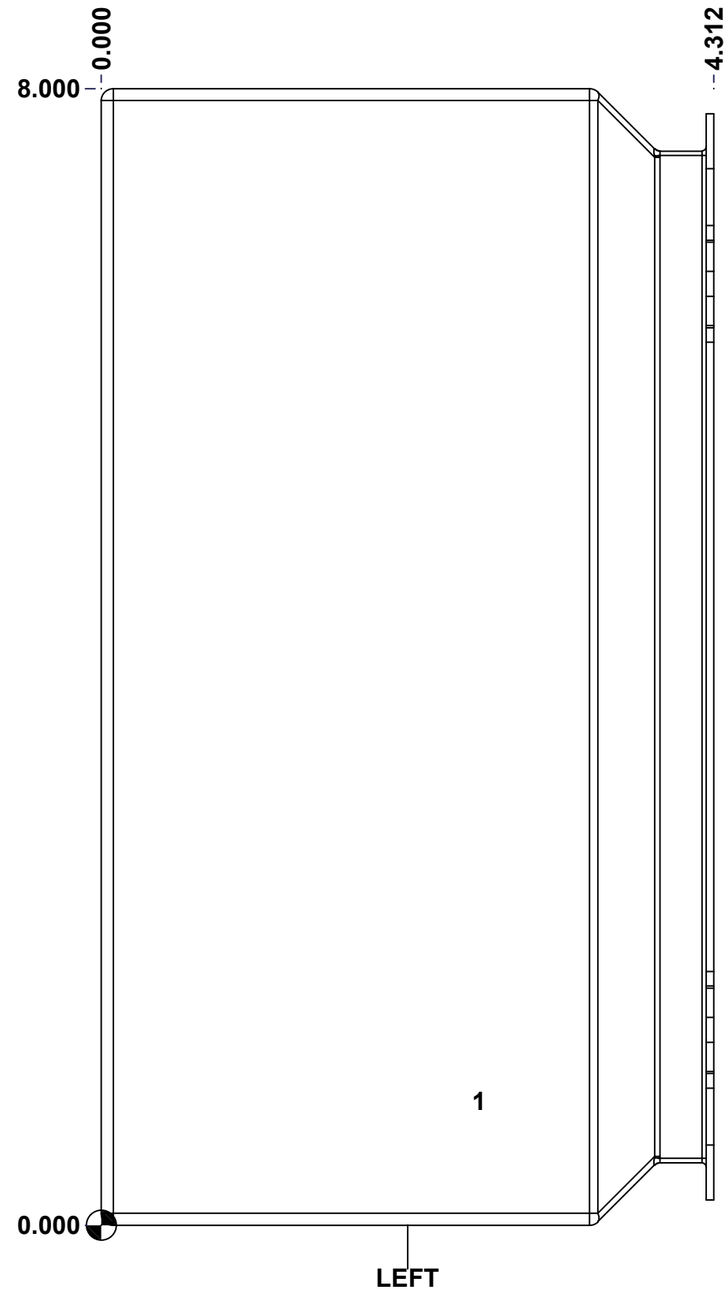

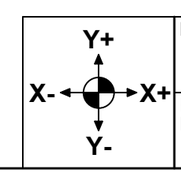

Description	Status
5412EALSC 8" x 8" x 4" Body	(NULL)

Part Number / Numéro Pièce	Rev.	
5412EALSC080804B	**0**	4 / 9

This drawing is confidential and must not be reproduced or used without the consent of EXM

Ce dessin est confidentiel et ne doit pas être reproduit ou utilisé sans le consentement de EXM

STANDARD FEATURES ARE NOT LISTED IN THIS HOLE TABLE

HOLE TABLE - BACK VIEW (CUSTOM FEATURE ONLY)

CUT-OUT	XDIM	YDIM	DESCRIPTION
1	7.000	0.000	FOOT 885 ESCHMF2
2	1.000	0.000	FOOT 885 ESCHMF2
3	7.000	8.000	FOOT 885 ESCHMF2
4	1.000	8.000	FOOT 885 ESCHMF2
5	7.000	0.344	RIVET NUT M6_FH_CE (Inside)
6	1.000	0.344	RIVET NUT M6_FH_CE (Inside)
7	7.000	7.656	RIVET NUT M6_FH_CE (Inside)
8	1.000	7.656	RIVET NUT M6_FH_CE (Inside)
9	0.875	7.125	PEM FHS-M6-20 (Inside)
10	7.125	7.125	PEM FHS-M6-20 (Inside)
11	7.125	0.875	PEM FHS-M6-20 (Inside)
12	0.875	0.875	PEM FHS-M6-20 (Inside)

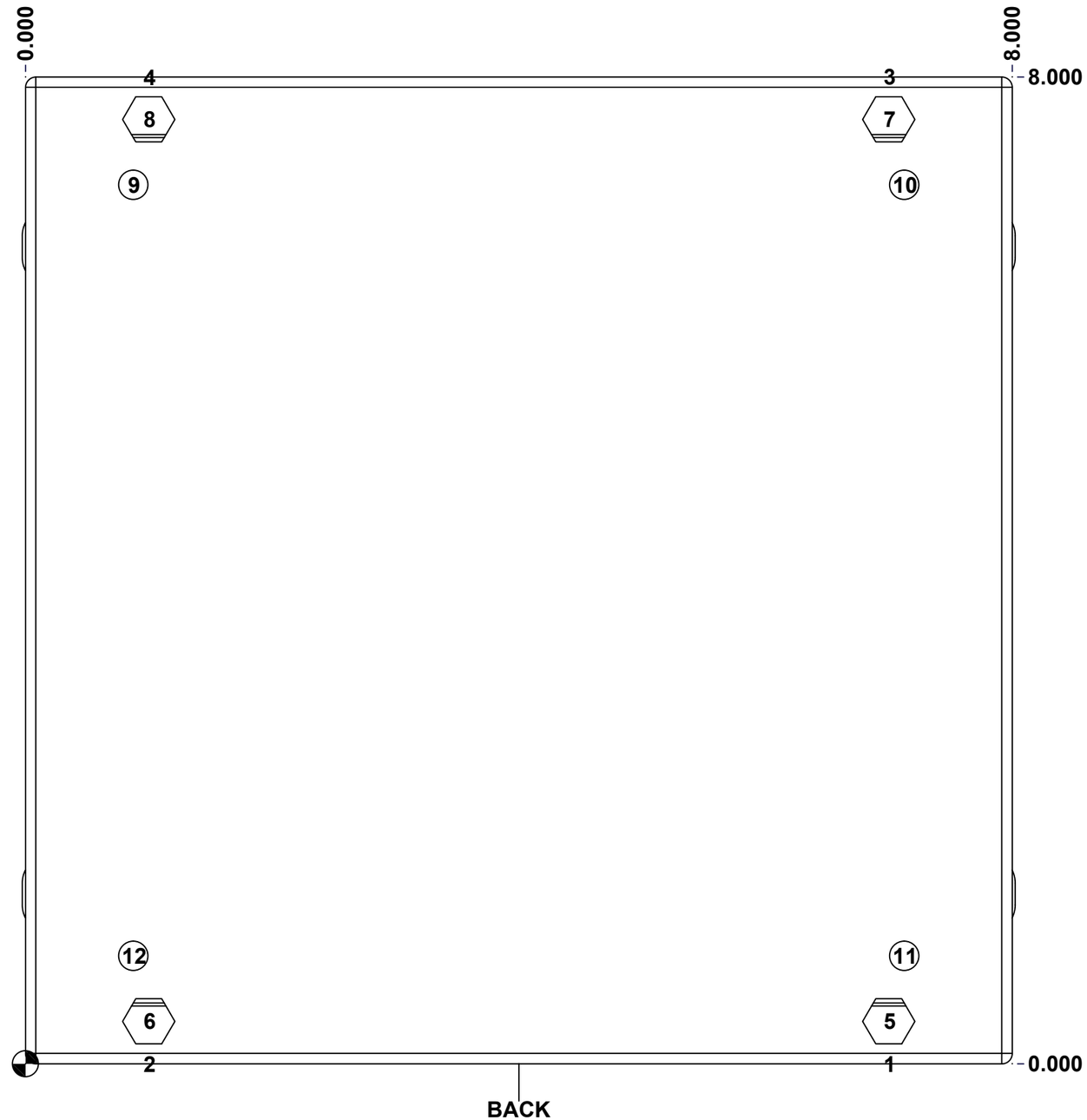

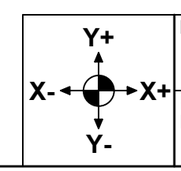

Description	Status
5412EALSC 8" x 8" x 4" Body	(NULL)

Part Number / Numéro Pièce	Rev.	
5412EALSC080804B	**0**	5 / 9

Tolerance ±1/32" unless otherwise specified

C:\Vault_Workspace\Inventor_Dwg\BoxCad\Result\5412EALSC080804\5412EALSC080804.idw

Tolérance ±1/32" sauf spécification contraire

This drawing is confidential and must not be reproduced or used without the consent of EXM

Ce dessin est confidentiel et ne doit pas être reproduit ou utilisé sans le consentement de EXM

No.	Revisions	Date	By/Par

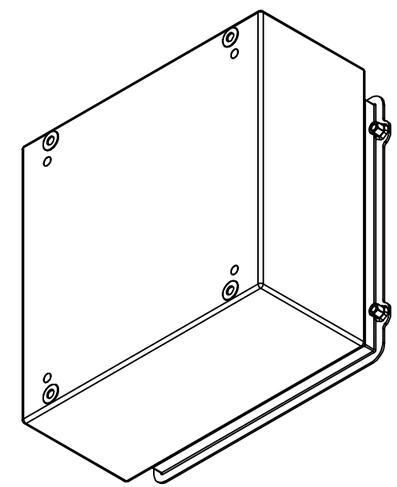

Isometric View

Qty	Part Number	Rev	Description
4	STK-PEM-FHS-M6-20	0	SS PEM Self-Clinching Stud M6 x 20.0mm
4	RIVET_NUT_SS_M6_FH_CE	0	Stainless Steel Rivet Nut M6 (Low Profile Close End)
1	STK-P-02400S	0	Powder Paint (Asa-61 Grey / Smooth)
1	5412EALSC080804B-P	0	5412EALSC 8" x 8" x 4" Body Part
1	STK-Q-08400	4	Aluminum Standoff M6 x 10mm
4	RIVET_NUT_SS_M5_FH_OE	0	Stainless Steel Rivet Nut M5 (Low Profile Open End)

Parts List

exm
Tél: (450) 979-4373
Fax: (450) 979-4626
www.exmweb.com

Flatness / Aplatissement: Max 3.0mm

Projection

Customer / Client

Date

Drawn By / Dessiné Par: BoxCad: BoxCad

Date: 30-Oct-14

Material / Matière: Aluminum 5052-H32 (1.4mm)

Color / Couleur: Asa-61 Grey

Finish / Fini: Smooth

Description: 5412EALSC 8" x 8" x 4" Body

Detail Rev.

Part Number / Numéro Pièce: **5412EALSC080804B**

Rev.: **0**

6 / 9

Tolerance ±1/32" unless otherwise specified

C:\Vault_Workspace\Inventor_Dwg\BoxCad\Result\5412EALSC080804\5412EALSC080804.idw

Tolérance ±1/32" sauf spécification contraire

This drawing is confidential and must not be reproduced or used without the consent of EXM

Ce dessin est confidentiel et ne doit pas être reproduit ou utilisé sans le consentement de EXM

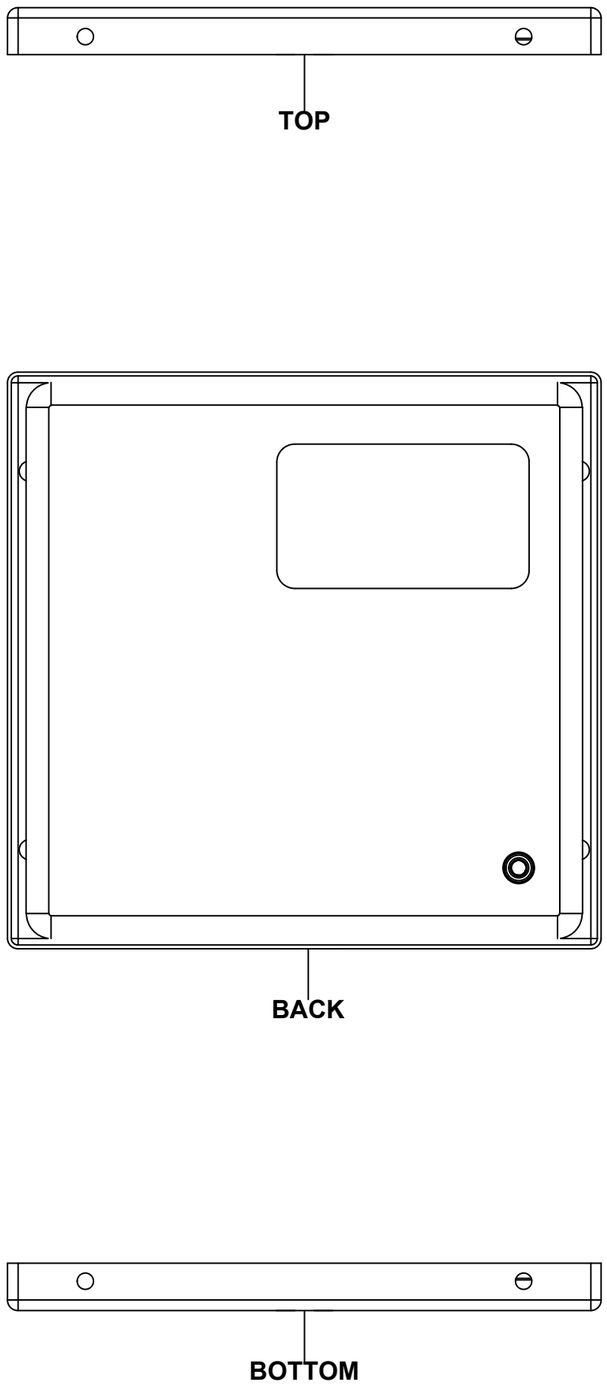

SEE BILL OF MATERIAL ON LAST PAGE

No.	Revisions	Date	By/Par

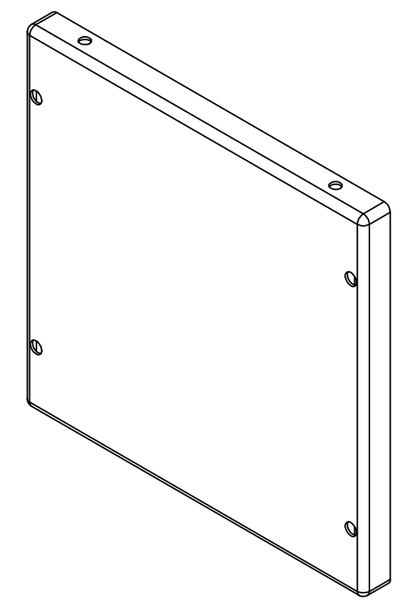

Isometric View

Tél: (450) 979-4373
Fax: (450) 979-4626
www.exmweb.com

Flatness / Aplatissement: Max 3.0mm

Projection

Customer / Client		Date	
Drawn By / Dessiné Par	BoxCad: BoxCad	Date	30-Oct-14
Material / Matière	Aluminum 5052-H32 (1.4mm)		
Color / Couleur	Asa-61 Grey	Finish / Fini	Smooth
Description	5412EALSC 8" x 8" Cover	Detail Rev.	
Part Number / Numéro Pièce	**5412EALSC080804C**	Rev.	**0**

7 / 9

This drawing is confidential and must not be reproduced or used without the consent of EXM

Ce dessin est confidentiel et ne doit pas être reproduit ou utilisé sans le consentement de EXM

STANDARD FEATURES ARE NOT LISTED IN THIS HOLE TABLE

HOLE TABLE - FRONT VIEW (CUSTOM FEATURE ONLY)

CUT-OUT	XDIM	YDIM	DESCRIPTION
1	1.145	1.125	STANDOFF M6 x 10mm (Inside)
2	2.750	6.000	LABEL_EXM

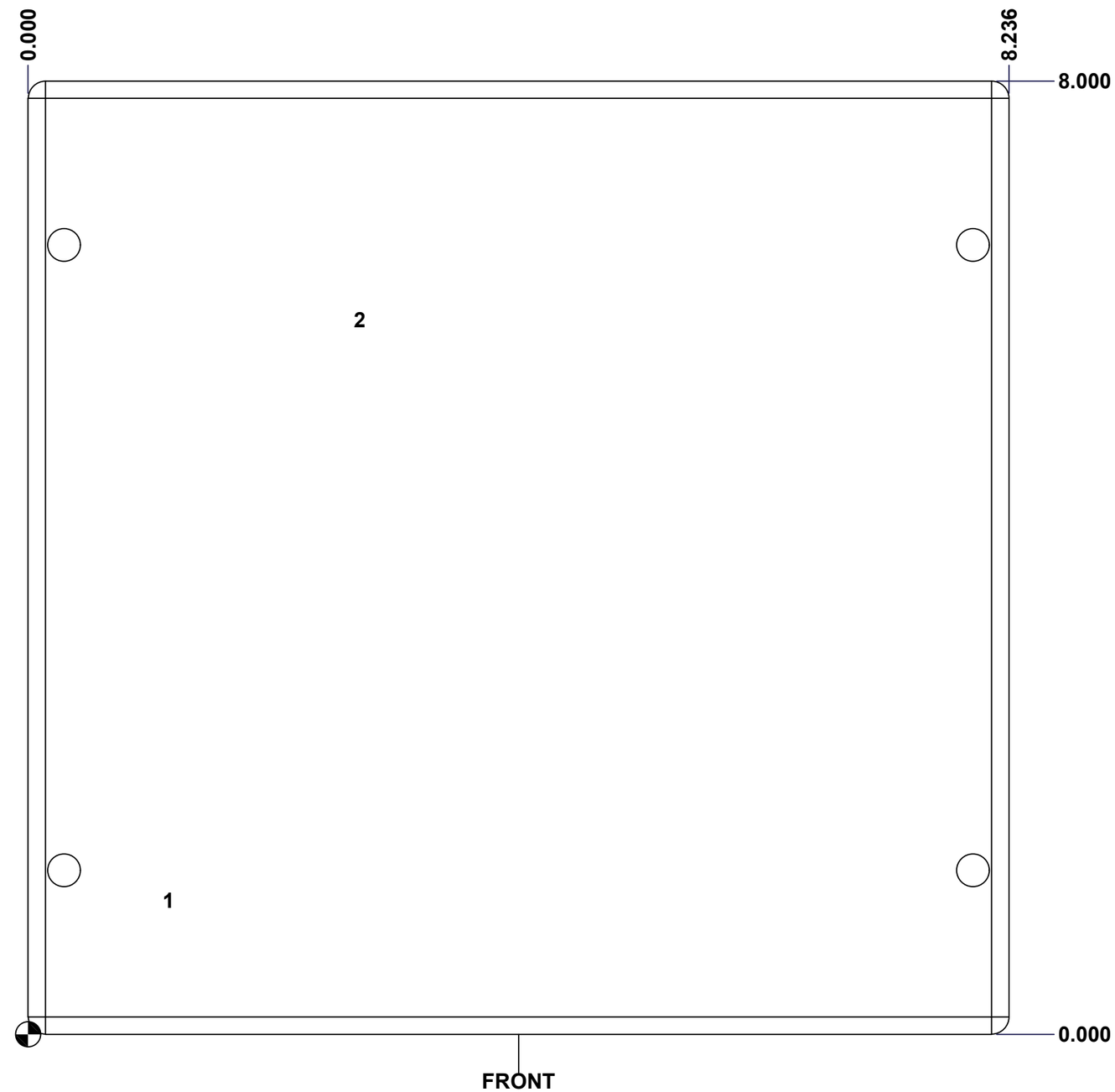

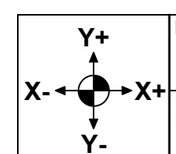

Description	Status
5412EALSC 8" x 8" Cover	(NULL)
Part Number / Numéro Pièce: **5412EALSC080804C**	Rev. **0**

Tolerance ±1/32" unless otherwise specified

C:\Vault_Workspace\Inventor_Dwg\BoxCad\Result\5412EALSC080804\5412EALSC080804.idw

Tolérance ±1/32" sauf spécification contraire

This drawing is confidential and must not be reproduced or used without the consent of EXM

Ce dessin est confidentiel et ne doit pas être reproduit ou utilisé sans le consentement de EXM

No.	Revisions	Date	By/Par

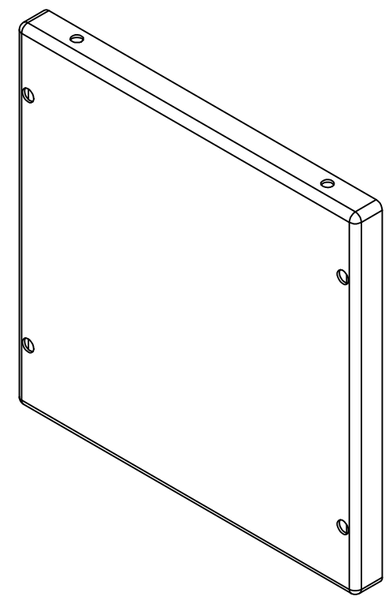

Isometric View

Qty	Part Number	Rev	Description
1	STK-Q-08400	4	Aluminum Standoff M6 x 10mm
1	STK-P-02400S	0	Powder Paint (Asa-61 Grey / Smooth)
1	5412EALSC080804G	0	5412EALSC 8" x 8" Gasket
1	STK-S-00100	0	3.5" x 2" Silver Milar Flexcon Sticker
1	5412EALSC080804C-P	0	5412EALSC 8" x 8" Cover Part

Parts List

exm
Tél: (450) 979-4373
Fax: (450) 979-4626
www.exmweb.com

Flatness / Aplatissement: Max 3.0mm

Projection

Customer / Client

Date

Drawn By / Dessiné Par: BoxCad: BoxCad

Date: 30-Oct-14

Material / Matière: Aluminum 5052-H32 (1.4mm)

Color / Couleur: Asa-61 Grey

Finish / Fini: Smooth

Description: 5412EALSC 8" x 8" Cover

Detail Rev.

Part Number / Numéro Pièce: **5412EALSC080804C**

Rev.: **0**

9 / 9

This drawing is confidential and must not be reproduced or used without the consent of EXM

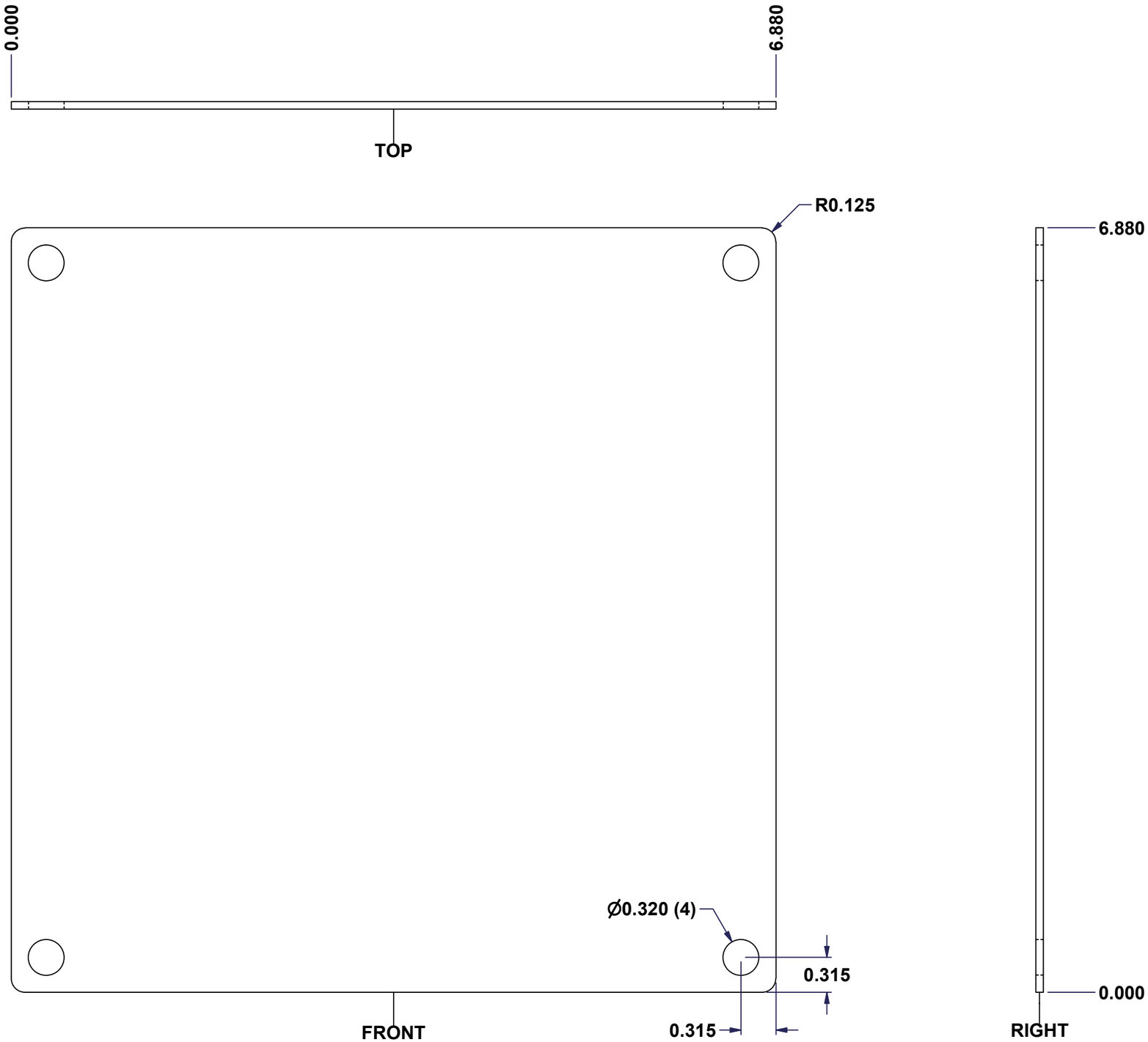

SEE BILL OF MATERIAL ON LAST PAGE

No.	Revisions	Date	By/Par

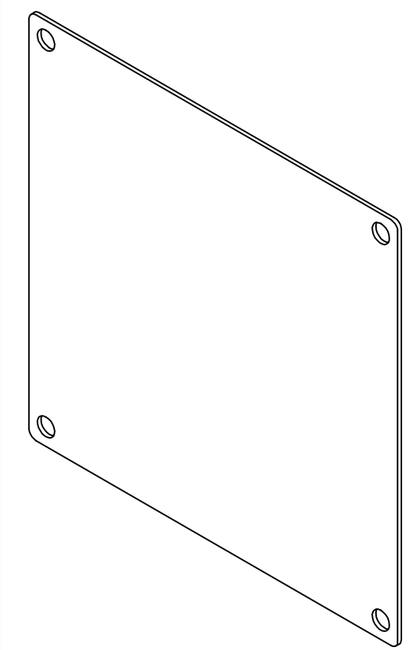

Isometric View

Ce dessin est confidentiel et ne doit pas être reproduit ou utilisé sans le consentement de EXM

Tél: (450) 979-4373
Fax: (450) 979-4626
www.exmweb.com

Flatness / Aplatissement: Max 3.0mm

Projection

Customer / Client		Date	
Drawn By / Dessiné Par	BoxCad	Date	23-Jan-07
Material / Matière	14 Ga Galvanized (1.7mm)		
Color / Couleur	Unpainted	Finish / Fini	Galvanized
Description	880 SP0808G - Inner Panel	Detail Rev.	
Part Number / Numéro Pièce	**880 SP0808G**	Rev.	**0**

1 / 2

Tolerance ±1/32" unless otherwise specified

C:\Vault_Workspace\Inventor_Dwg\Inv-8\880SP\880SP0808G.idw

Tolérance ±1/32" sauf spécification contraire

This drawing is confidential and must not be reproduced or used without the consent of EXM

Ce dessin est confidentiel et ne doit pas être reproduit ou utilisé sans le consentement de EXM

No.	Revisions	Date	By/Par

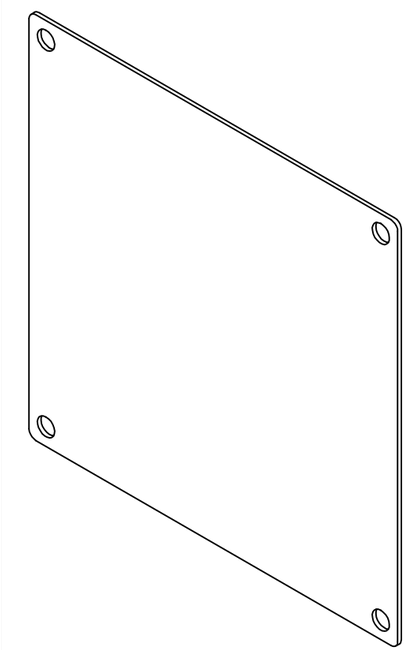

Isometric View

Tél: (450) 979-4373
Fax: (450) 979-4626
www.exmweb.com

Flatness
Aplatissement
Max 3.0mm

Projection

Customer Client		Date	
Drawn By Dessiné Par	BoxCad	Date	23-Jan-07
Material Matière	14 Ga Galvanized (1.7mm)		
Color Couleur	Unpainted	Finish Fini	Galvanized
Description 880 SP0808G - Inner Panel		Detail Rev.	
Part Number Numéro Pièce **880 SP0808G**		Rev. **0**	2 / 2

Qty	Part Number	Rev	Description
1	880 SP0808G-P	0	880 SP0808G - Inner Panel Part

Parts List