This drawing is confidential and must not be reproduced or used without the consent of EXM

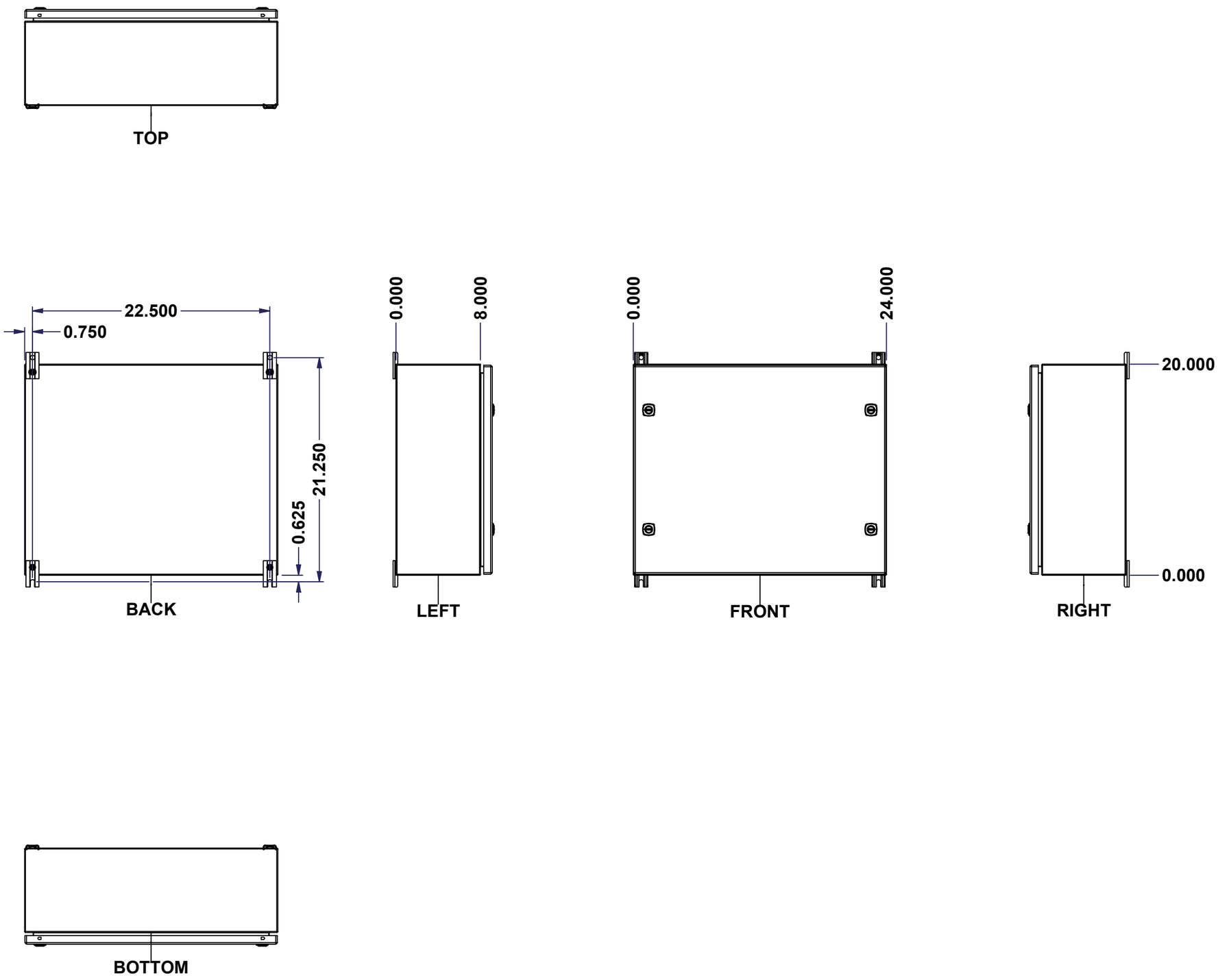

No.	Revisions	Date	By/Par

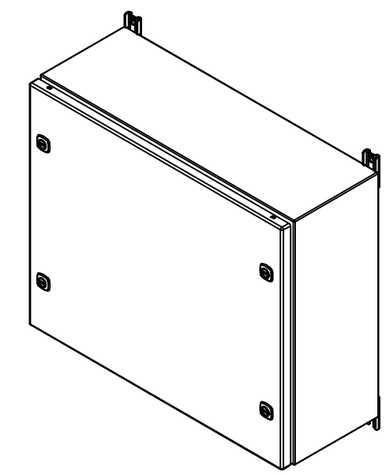

Isometric View

Ce dessin est confidentiel et ne doit pas être reproduit ou utilisé sans le consentement de EXM

Tél: (450) 979-4373
Fax: (450) 979-4626
www.exmweb.com

Flatness / Aplatissement: Max 3.0mm

Projection

Customer / Client		Date	
Drawn By / Dessiné Par	BoxCad: BoxCad	Date	18-Jul-23
Material / Matière	16 Ga Cold Rolled A1008 CS Type B (1.4mm)		
Color / Couleur	Asa-61 Grey	Finish / Fini	Smooth
Description	5412ESQT 20" x 24" x 8" Assembly	Detail Rev.	
Part Number / Numéro Pièce	5412ESQT202408TH	Rev.	0

1 / 16

SEE BILL OF MATERIAL ON LAST PAGE

This drawing is confidential and must not be reproduced or used without the consent of EXM

Ce dessin est confidentiel et ne doit pas être reproduit ou utilisé sans le consentement de EXM

NOTE

ITEM	DESCRIPTION
1	NEMA 4/12 Enclosure
2	C/W Standard ground studs on box and cover
3	C/W Standard door stiffener
4	C/W Standard inner panel (Included)
5	C/W Standard inner panel mounting studs
6	C/W 885 ESMF3_OPEN Sold separately (Installed)
7	C/W 885 ESMF3_CLOSE Sold separately (Installed)
8	C/W R5 Insulation (Installed by EXM)

No.	Revisions	Date	By/Par

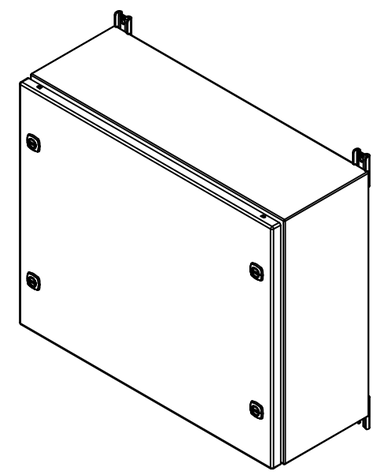

Isometric View

Tél: (450) 979-4373
Fax: (450) 979-4626
www.exmweb.com

Flatness
Aplatissement
Max 3.0mm

Projection

Customer
Client

Date

Drawn By
Dessiné Par
BoxCad: BoxCad

Date
18-Jul-23

Material
Matière
16 Ga Cold Rolled A1008 CS Type B (1.4mm)

Color
Couleur
Asa-61 Grey

Finish
Fini
Smooth

Description
5412ESQT 20" x 24" x 8" Assembly

Detail Rev.

Part Number
Numéro Pièce
5412ESQT202408TH

Rev.
0

2 / 16

PACKING

ITEM	QTY	DESCRIPTION
Cardboard sleeve	2	Top and Bottom
Cardboard strip	2	Between back of enclosure and inner panel
Plastic bag	1	To protect cover surface and inside gasket
Plastic strap - Black	2	To Squeeze the 2 cardboard sleeve together
Packaging label	1	White label with product number

Parts List

Qty	Part Number	Rev	Description
4	STK-Q-00600	2	M12 to M8 Adaptor
1	881 SP2420G	0	881 SP - Inner Panel
1	STK-K-01800	5	5412 ES Accessory Kit
1	5412ESQT202408THC	0	5412ESQT 20" x 24" Cover
1	5412ESQT202408THB	0	5412ESQT 20" x 24" x 8" Body

This drawing is confidential and must not be reproduced or used without the consent of EXM

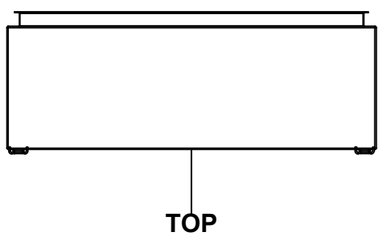

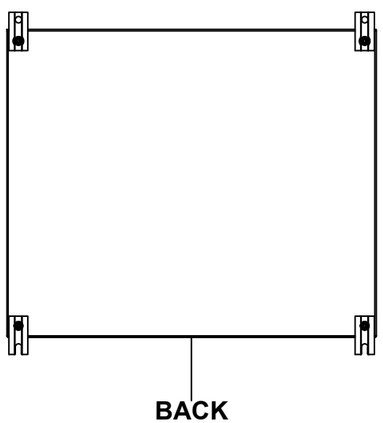

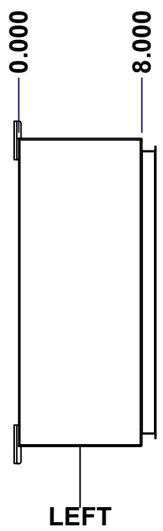

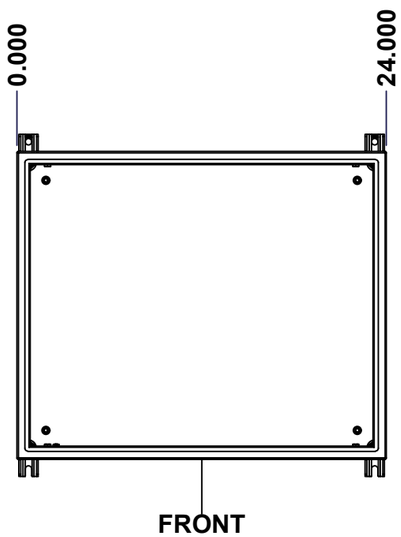

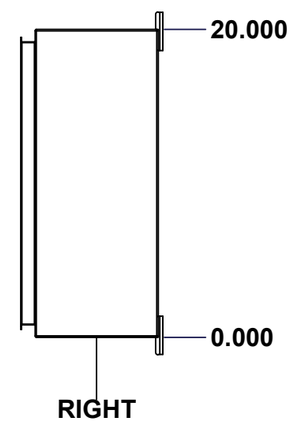

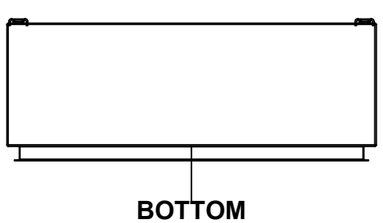

Ce dessin est confidentiel et ne doit pas être reproduit ou utilisé sans le consentement de EXM

No.	Revisions	Date	By/Par

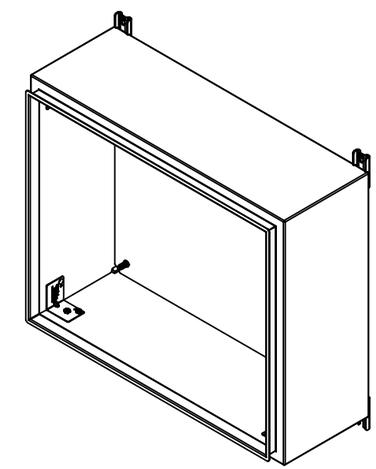

Isometric View

Tél: (450) 979-4373
Fax: (450) 979-4626
www.exmweb.com

Flatness / Aplatissement: Max 3.0mm

Projection

Customer / Client		Date	
Drawn By / Dessiné Par	BoxCad: BoxCad	Date	18-Jul-23
Material / Matière	16 Ga Cold Rolled A1008 CS Type B (1.4mm)		
Color / Couleur	Asa-61 Grey	Finish / Fini	Smooth
Description	5412ESQT 20" x 24" x 8" Body	Detail Rev.	
Part Number / Numéro Pièce	**5412ESQT202408THB**	Rev.	**0**

3 / 16

SEE BILL OF MATERIAL ON LAST PAGE

This drawing is confidential and must not be reproduced or used without the consent of EXM

Ce dessin est confidentiel et ne doit pas être reproduit ou utilisé sans le consentement de EXM

STANDARD FEATURES ARE NOT LISTED IN THIS HOLE TABLE

HOLE TABLE - TOP VIEW (CUSTOM FEATURE ONLY)

CUT-OUT	XDIM	YDIM	DESCRIPTION
1	2.000	6.500	INSUL. STUD M6 x 18mm (Inside)
2	22.000	6.500	INSUL. STUD M6 x 18mm (Inside)

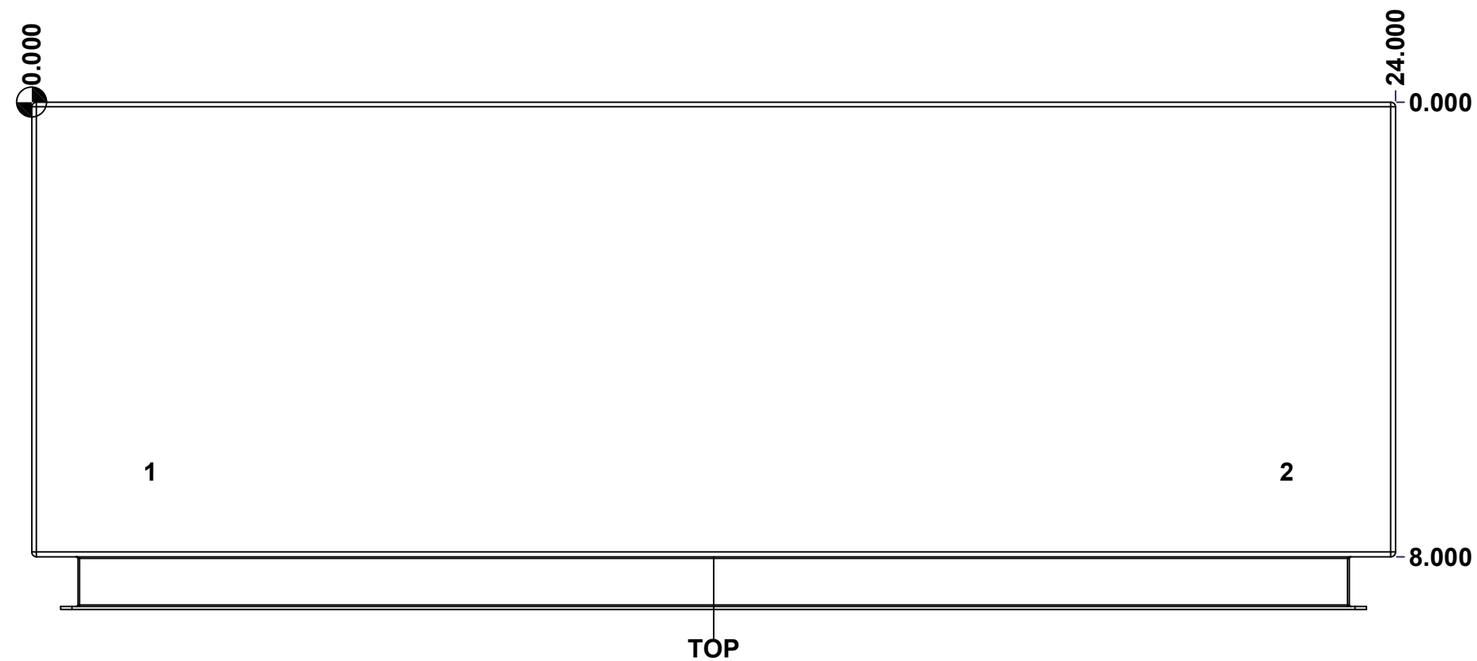

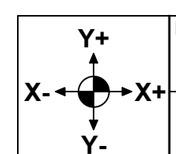

Description	Status
5412ESQT 20" x 24" x 8" Body	(NULL)

Part Number / Numéro Pièce	Rev.	
5412ESQT202408THB	**0**	4 / 16

This drawing is confidential and must not be reproduced or used without the consent of EXM

Ce dessin est confidentiel et ne doit pas être reproduit ou utilisé sans le consentement de EXM

STANDARD FEATURES ARE NOT LISTED IN THIS HOLE TABLE

HOLE TABLE - BOTTOM VIEW (CUSTOM FEATURE ONLY)

CUT-OUT	XDIM	YDIM	DESCRIPTION
1	2.000	6.500	INSUL. STUD M6 x 18mm (Inside)
2	22.000	6.500	INSUL. STUD M6 x 18mm (Inside)

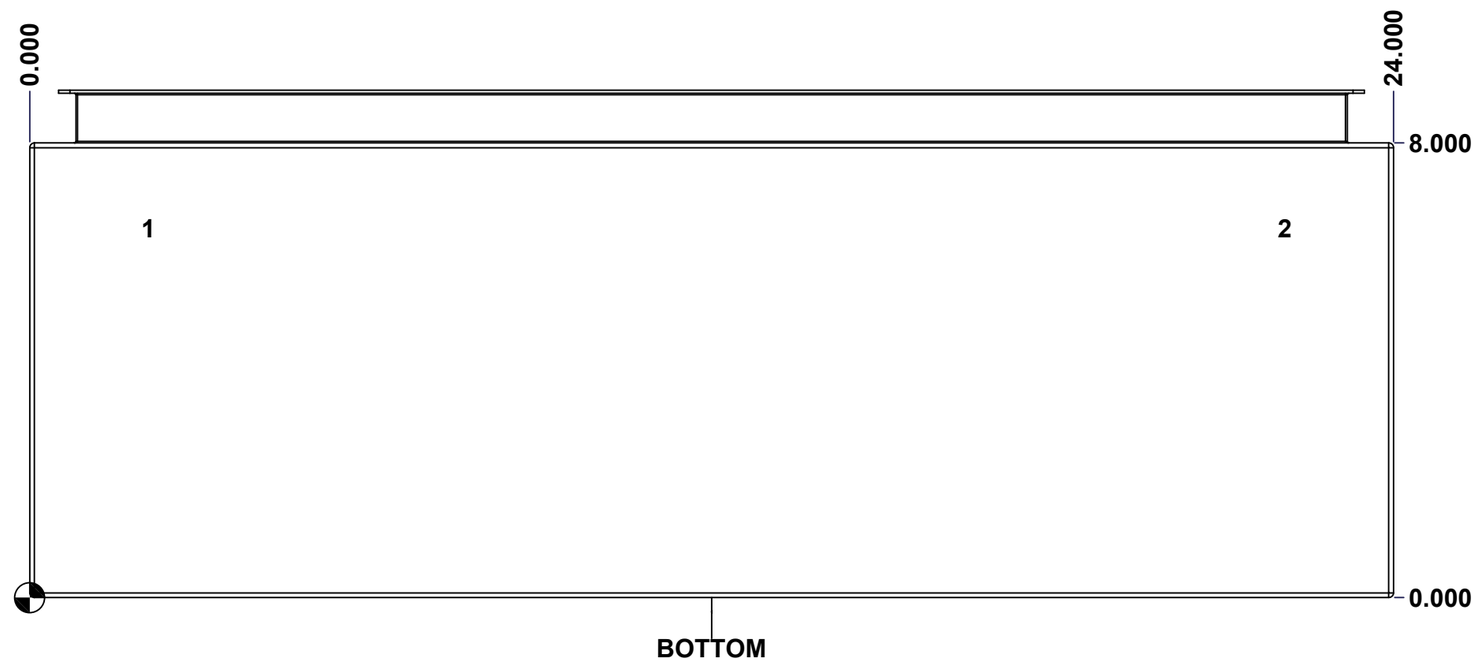

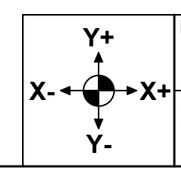

Description	Status
5412ESQT 20" x 24" x 8" Body	(NULL)
Part Number / Numéro Pièce: **5412ESQT202408THB**	Rev. **0**

This drawing is confidential and must not be reproduced or used without the consent of EXM

Ce dessin est confidentiel et ne doit pas être reproduit ou utilisé sans le consentement de EXM

STANDARD FEATURES ARE NOT LISTED IN THIS HOLE TABLE

HOLE TABLE - BACK VIEW (CUSTOM FEATURE ONLY)

CUT-OUT	XDIM	YDIM	DESCRIPTION
1	1.875	1.875	IP STUD M8 x 35mm (Inside)
2	1.875	18.125	IP STUD M8 x 35mm (Inside)
3	22.125	18.125	IP STUD M8 x 35mm (Inside)
4	22.125	1.875	IP STUD M8 x 35mm (Inside)
---	---	---	---
5	23.250	0.000	FOOT 885 ESMF3_OPEN
6	0.750	0.000	FOOT 885 ESMF3_OPEN
7	23.250	20.000	FOOT 885 ESMF3_CLOSE
8	0.750	20.000	FOOT 885 ESMF3_CLOSE

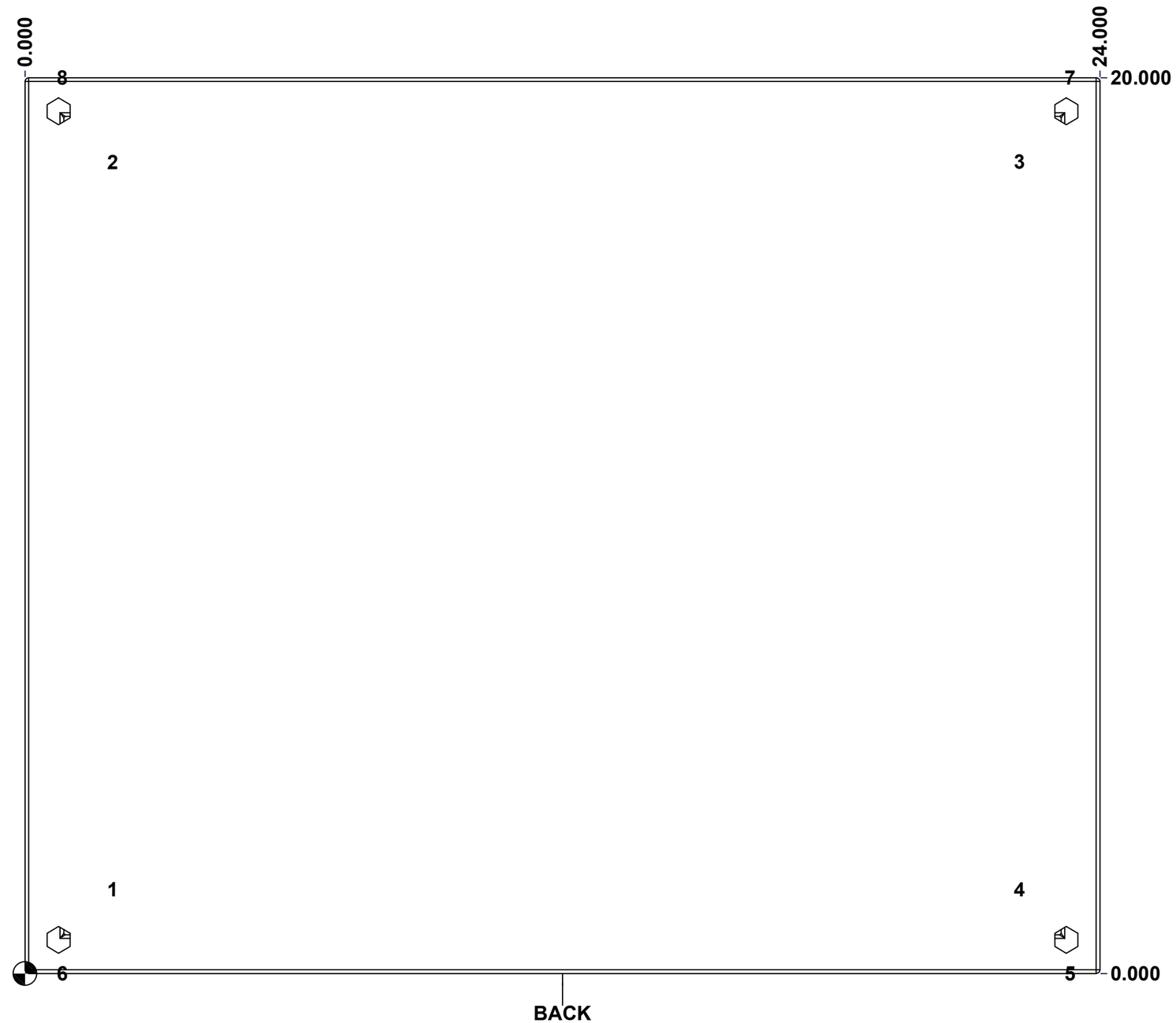

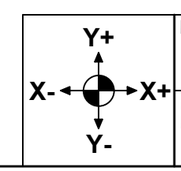

Description	Status
5412ESQT 20" x 24" x 8" Body	(NULL)

Part Number / Numéro Pièce	Rev.	
5412ESQT202408THB	**0**	6 / 16

This drawing is confidential and must not be reproduced or used without the consent of EXM
Ce dessin est confidentiel et ne doit pas être reproduit ou utilisé sans le consentement de EXM

No.	Revisions	Date	By/Par

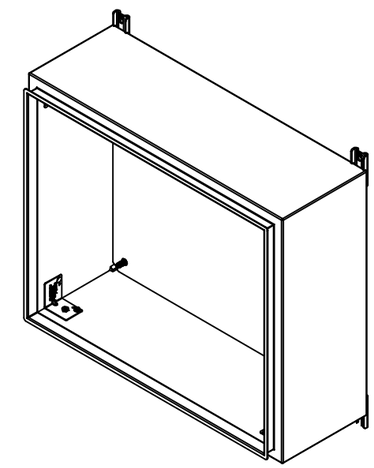

Isometric View

Qty	Part Number	Rev	Description
1	885 ESMF3	0	885 ESMF3 Mounting Foot Kit
4	RIVET_NUT_M10_FH_CE	0	Rivet Nut M10 (Low Profile Close End)
1	STK-K-70554	3	5412 ESTH Accessory Kit
1	5412ESQT202408THI-RS	0	5412ESQT 20" x 24" Right Insulation
1	5412ESQT202408THI-LS	0	5412ESQT 20" x 24" Left Insulation
1	5412ESQT202408THI-BT	0	5412ESQT 20" x 24" Top and Bottom Insulation
1	5412ESQT202408THI-TP	0	5412ESQT 20" x 24" Top and Bottom Insulation
1	5412ESQT202408THI-B	0	5412ESQT 20" x 24" Back Insulation
4	STK-Q-16055	1	M6 x 18mm Stud (No Paint Cap Required)
1	STK-P-02400S	0	Powder Paint (Asa-61 Grey / Smooth)
4	STK-Q-16005	1	Stud M8 x 35 (No Paint Cap Required)
1	5412ESQT202408THB-P	0	5412ESQT 20" x 24" x 8" Body Part

Parts List

Tél: (450) 979-4373
Fax: (450) 979-4626
www.exmweb.com

Flatness / Aplatissement: Max 3.0mm

Projection

Customer / Client

Date

Drawn By / Dessiné Par: BoxCad: BoxCad

Date: 18-Jul-23

Material / Matière: 16 Ga Cold Rolled A1008 CS Type B (1.4mm)

Color / Couleur: Asa-61 Grey

Finish / Fini: Smooth

Description: 5412ESQT 20" x 24" x 8" Body

Detail Rev.

Part Number / Numéro Pièce: **5412ESQT202408THB**

Rev. **0**

7 / 16

This drawing is confidential and must not be reproduced or used without the consent of EXM

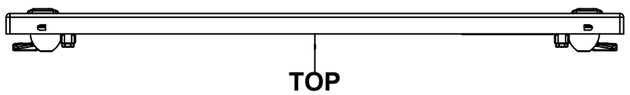

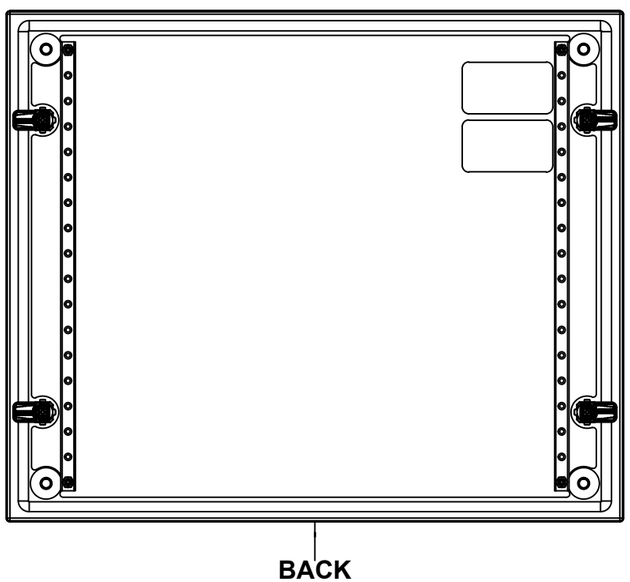

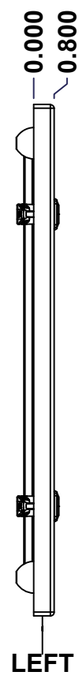

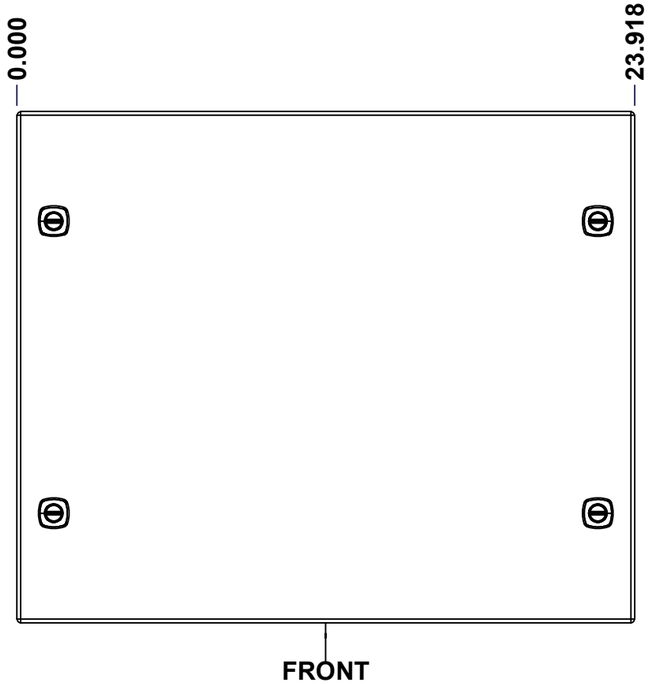

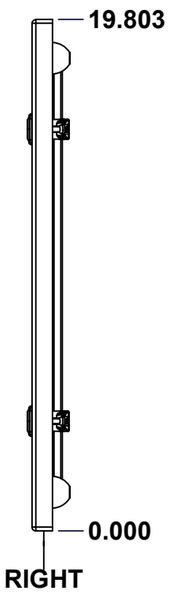

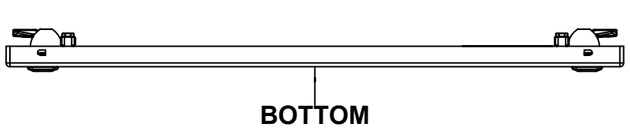

SEE BILL OF MATERIAL ON LAST PAGE

No.	Revisions	Date	By/Par

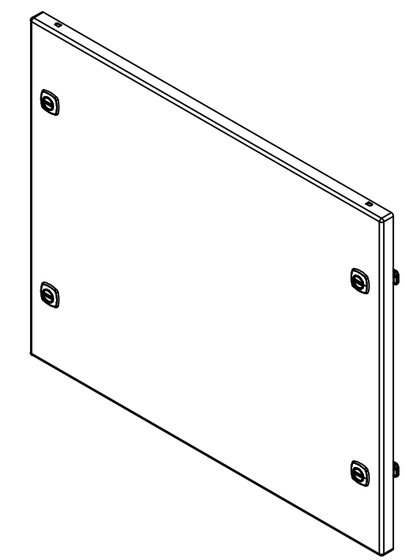

Isometric View

Ce dessin est confidentiel et ne doit pas être reproduit ou utilisé sans le consentement de EXM

Tél: (450) 979-4373
Fax: (450) 979-4626
www.exmweb.com

Flatness / Aplatissement: Max 3.0mm

Projection

Customer / Client		Date	
Drawn By / Dessiné Par	BoxCad: BoxCad	Date	18-Jul-23
Material / Matière	16 Ga Cold Rolled A1008 CS Type B (1.4mm)		
Color / Couleur	Asa-61 Grey	Finish / Fini	Smooth
Description	5412ESQT 20" x 24" Cover	Detail Rev.	
Part Number / Numéro Pièce	**5412ESQT202408THC**	Rev.	**0**

This drawing is confidential and must not be reproduced or used without the consent of EXM

Ce dessin est confidentiel et ne doit pas être reproduit ou utilisé sans le consentement de EXM

STANDARD FEATURES ARE NOT LISTED IN THIS HOLE TABLE

HOLE TABLE - FRONT VIEW (CUSTOM FEATURE ONLY)

CUT-OUT	XDIM	YDIM	DESCRIPTION
1	2.401	1.535	STUD M6 x 18mm (Inside)
2	2.401	18.268	STUD M6 x 18mm (Inside)
3	21.517	18.268	STUD M6 x 18mm (Inside)
4	21.517	1.535	STUD M6 x 18mm (Inside)
5	1.550	1.500	STUD M6 x 18mm (Inside)
6	22.368	1.500	STUD M6 x 18mm (Inside)
7	1.550	18.303	STUD M6 x 18mm (Inside)
8	22.368	18.303	STUD M6 x 18mm (Inside)
---	---	---	---
9	1.424	15.553	880 SCQ4-SL
10	1.424	4.250	880 SCQ4-SL
11	22.494	15.553	880 SCQ4-SL
12	22.494	4.250	880 SCQ4-SL

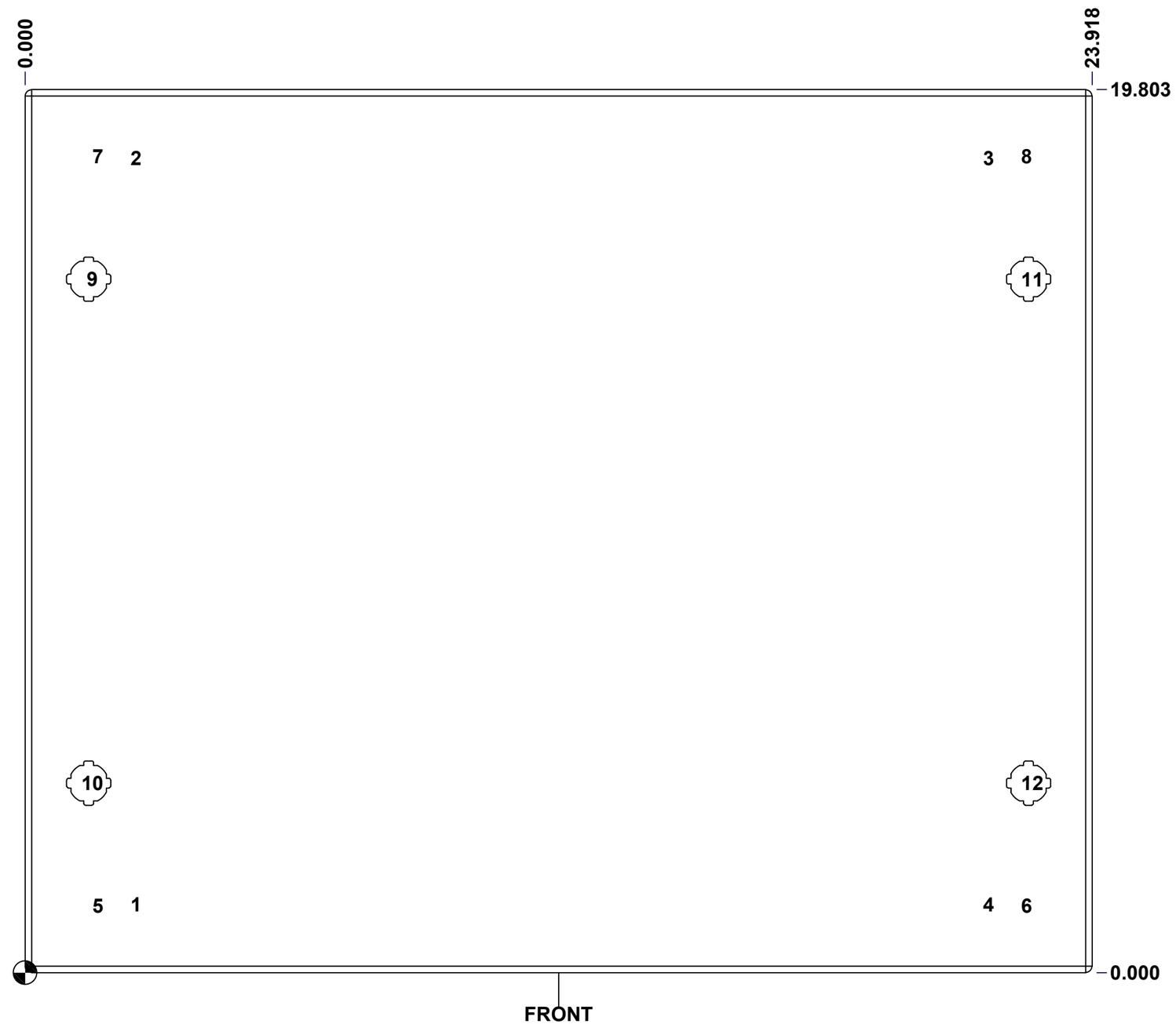

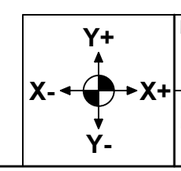

Description	Status
5412ESQT 20" x 24" Cover	(NULL)
Part Number / Numéro Pièce: **5412ESQT202408THC**	Rev. **0**

Tolerance ±1/32" unless otherwise specified

C:\Vault_Workspace\Inventor_Dwg\BoxCad\Result\5412ESQT202408TH\5412ESQT202408TH.idw

Tolérance ±1/32" sauf spécification contraire

This drawing is confidential and must not be reproduced or used without the consent of EXM

Ce dessin est confidentiel et ne doit pas être reproduit ou utilisé sans le consentement de EXM

No.	Revisions	Date	By/Par

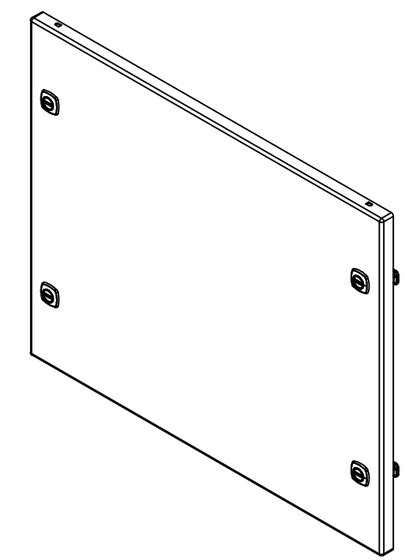

Isometric View

QTY	Part Number	Rev	Description
2	STK-S-00100	0	3.5" x 2" Silver Milar Flexcon Sticker
4	STK-Q-07250	2	M6 x 16mm Collar Nut
2	STK-Q-46020-20	5	5412 ES Vertical Door Stiffener 20"
1	5412ESQT202408THI-C	0	5412ESQT 20" x 24" Cover Insulation
1	STK-P-02400S	0	Powder Paint (Asa-61 Grey / Smooth)
8	STK-Q-16055	1	M6 x 18mm Stud (No Paint Cap Required)
1	5412ESQT202408THG	0	5412ESQT 20" x 24" Cover Gasket Part
1	5412ESQT202408THC-P	0	5412ESQT 20" x 24" Cover Part
4	STK-K-12500	16	5412 ES 1/4 Turn Lock
4	STK-Q-46515	3	5412 ES Door Support with Brass Insert

Parts List

Tél: (450) 979-4373
Fax: (450) 979-4626
www.exmweb.com

Flatness / Aplatissement: Max 3.0mm

Projection

Customer / Client

Date

Drawn By / Dessiné Par: BoxCad: BoxCad

Date: 18-Jul-23

Material / Matière: 16 Ga Cold Rolled A1008 CS Type B (1.4mm)

Color / Couleur: Asa-61 Grey

Finish / Fini: Smooth

Description: 5412ESQT 20" x 24" Cover

Detail Rev.

Part Number / Numéro Pièce: **5412ESQT202408THC**

Rev.: **0**

Tolerance ±1/32" unless otherwise specified

C:\Vault_Workspace\Inventor_Dwg\BoxCad\Result\5412ESQT202408TH\5412ESQT202408TH.idw

Tolérance ±1/32" sauf spécification contraire

This drawing is confidential and must not be reproduced or used without the consent of EXM

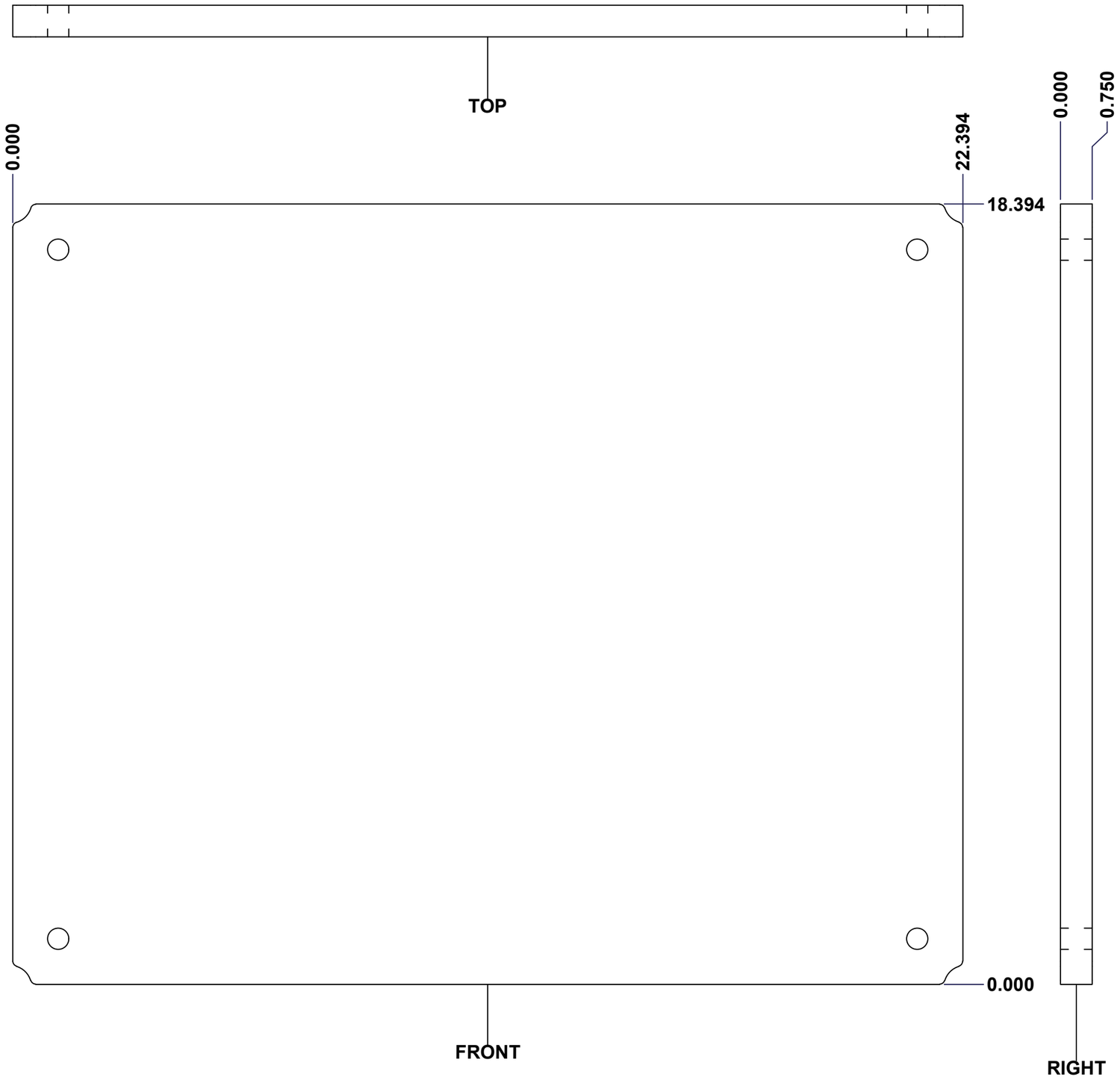

SEE BILL OF MATERIAL ON LAST PAGE

No.	Revisions	Date	By/Par

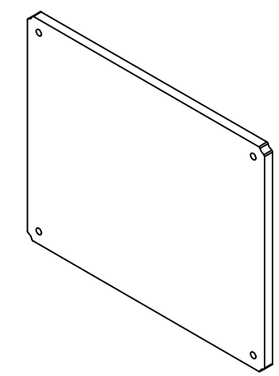

Isometric View

Tél: (450) 979-4373
Fax: (450) 979-4626
www.exmweb.com

Flatness
Aplatissement
Max 3.0mm

Projection

Customer Client		Date	
Drawn By Dessiné Par	BoxCad: Patrick Deschenes	Date	23-Jan-07
Material Matière	Polyisocyanurate		
Color Couleur	Aluminum	Finish Fini	N/A
Description 5412ESQT 20" x 24" Back Insulation		Detail Rev.	
Part Number Numéro Pièce **5412ESQT202408THI-B**		Rev. **0**	11 / 16

Ce dessin est confidentiel et ne doit pas être reproduit ou utilisé sans le consentement de EXM

This drawing is confidential and must not be reproduced or used without the consent of EXM

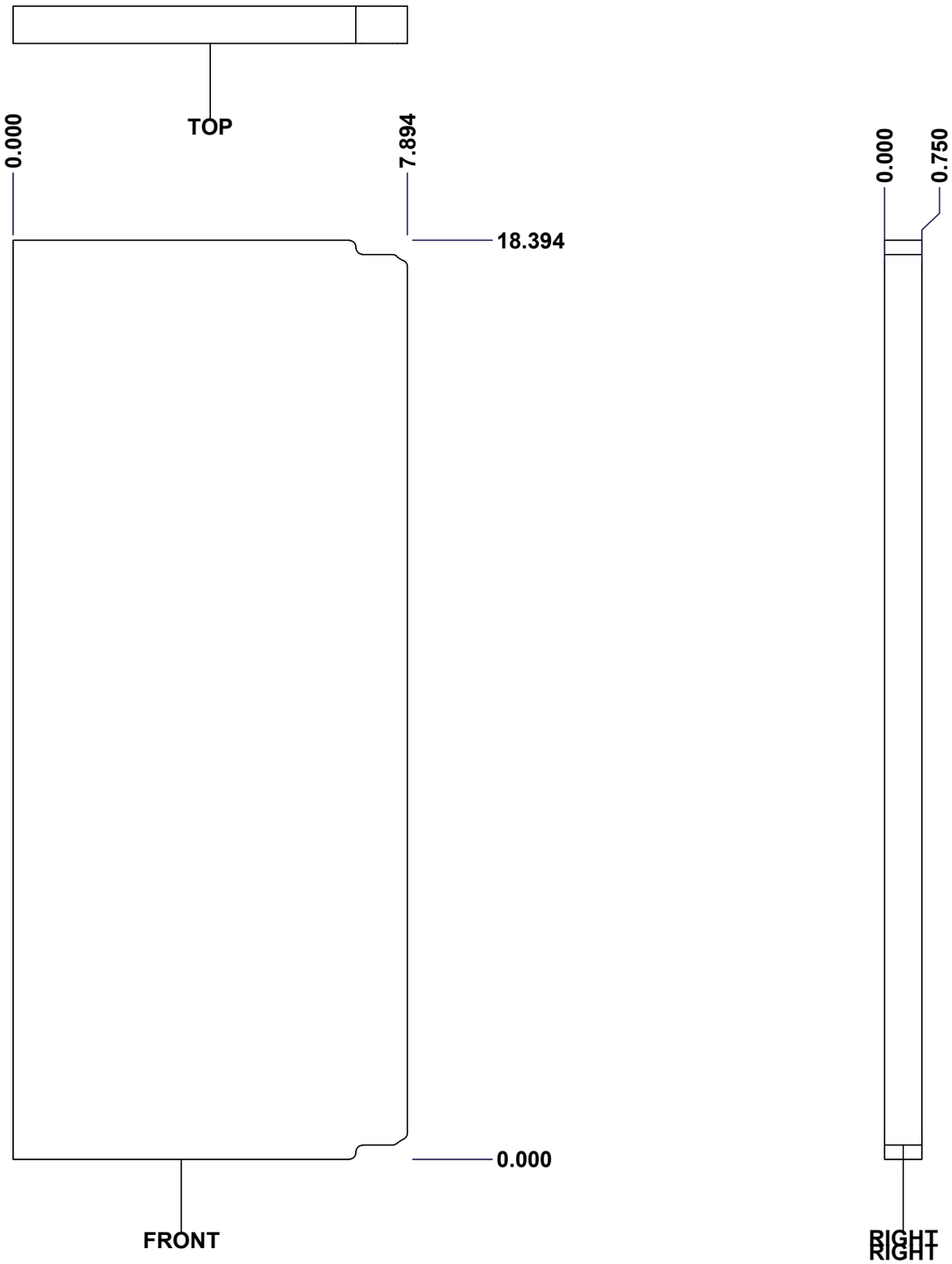

SEE BILL OF MATERIAL ON LAST PAGE

No.	Revisions	Date	By/Par

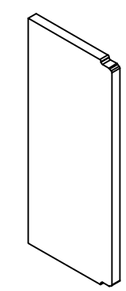

Isometric View

Ce dessin est confidentiel et ne doit pas être reproduit ou utilisé sans le consentement de EXM

Tél: (450) 979-4373
Fax: (450) 979-4626
www.exmweb.com

Flatness / Aplatissement: Max 3.0mm

Projection

Customer / Client		Date	
Drawn By / Dessiné Par	BoxCad: Patrick Deschenes	Date	23-Jan-07
Material / Matière	Polyisocyanurate		
Color / Couleur	Aluminum	Finish / Fini	N/A
Description	5412ESQT 20" x 24" Left Insulation	Detail Rev.	
Part Number / Numéro Pièce	**5412ESQT202408THI-LS**	Rev. **0**	12 / 16

This drawing is confidential and must not be reproduced or used without the consent of EXM

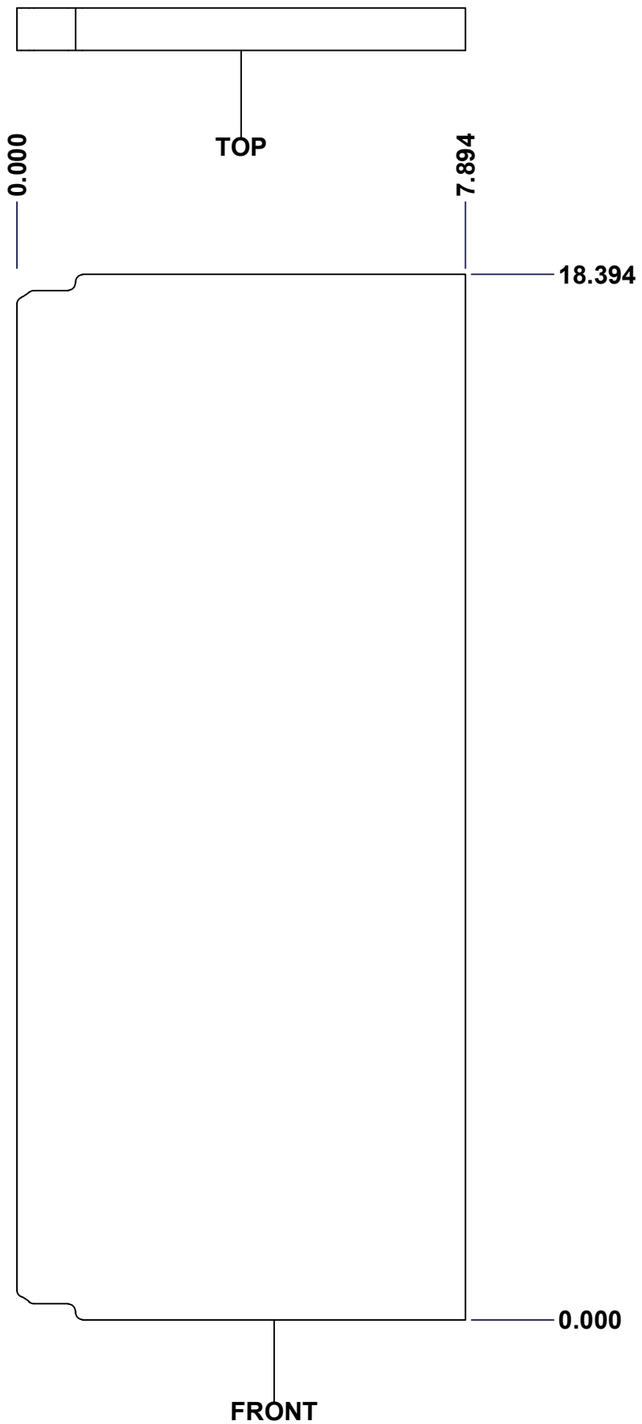

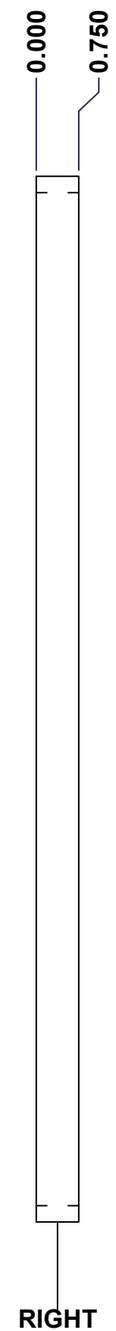

SEE BILL OF MATERIAL ON LAST PAGE

No.	Revisions	Date	By/Par

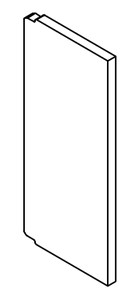

Isometric View

Ce dessin est confidentiel et ne doit pas être reproduit ou utilisé sans le consentement de EXM

Tél: (450) 979-4373
Fax: (450) 979-4626
www.exmweb.com

Flatness / Aplatissement: Max 3.0mm

Projection

Customer / Client		Date	
Drawn By / Dessiné Par	BoxCad: Patrick Deschenes	Date	23-Jan-07
Material / Matière	Polyisocyanurate		
Color / Couleur	Aluminum	Finish / Fini	N/A
Description	5412ESQT 20" x 24" Right Insulation	Detail Rev.	
Part Number / Numéro Pièce	**5412ESQT202408THI-RS**	Rev. **0**	13 / 16

Tolerance ±1/32" unless otherwise specified

C:\Vault_Workspace\Inventor_Dwg\BoxCad\Result\5412ESQT202408TH\5412ESQT202408TH.idw

Tolérance ±1/32" sauf spécification contraire

This drawing is confidential and must not be reproduced or used without the consent of EXM

Ce dessin est confidentiel et ne doit pas être reproduit ou utilisé sans le consentement de EXM

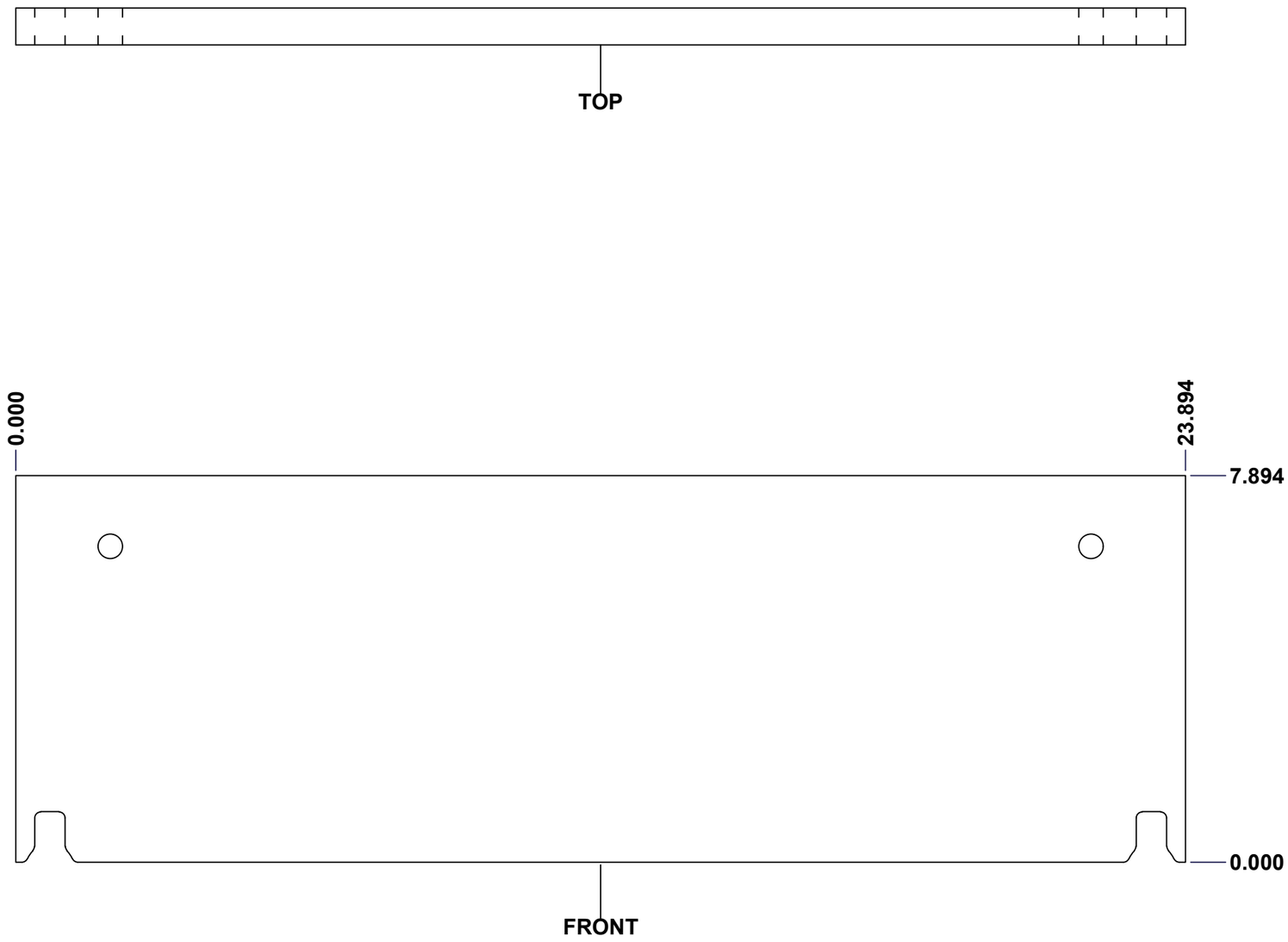

No.	Revisions	Date	By/Par

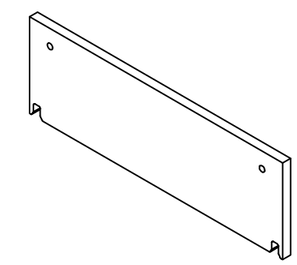

Isometric View

Tél: (450) 979-4373
Fax: (450) 979-4626
www.exmweb.com

Flatness / Aplatissement: Max 3.0mm

Projection

Customer / Client		Date	
Drawn By / Dessiné Par	BoxCad: Patrick Deschenes	Date	23-Jan-07
Material / Matière	Polyisocyanurate		
Color / Couleur	Aluminum	Finish / Fini	N/A
Description	5412ESQT 20" x 24" Top and Bottom Insulation	Detail Rev.	
Part Number / Numéro Pièce	5412ESQT202408THI-TP	Rev. 0	14 / 16

SEE BILL OF MATERIAL ON LAST PAGE

Tolerance ±1/32" unless otherwise specified

C:\Vault_Workspace\Inventor_Dwg\BoxCad\Result\5412ESQT202408TH\5412ESQT202408TH.idw

Tolérance ±1/32" sauf spécification contraire

This drawing is confidential and must not be reproduced or used without the consent of EXM

Ce dessin est confidentiel et ne doit pas être reproduit ou utilisé sans le consentement de EXM

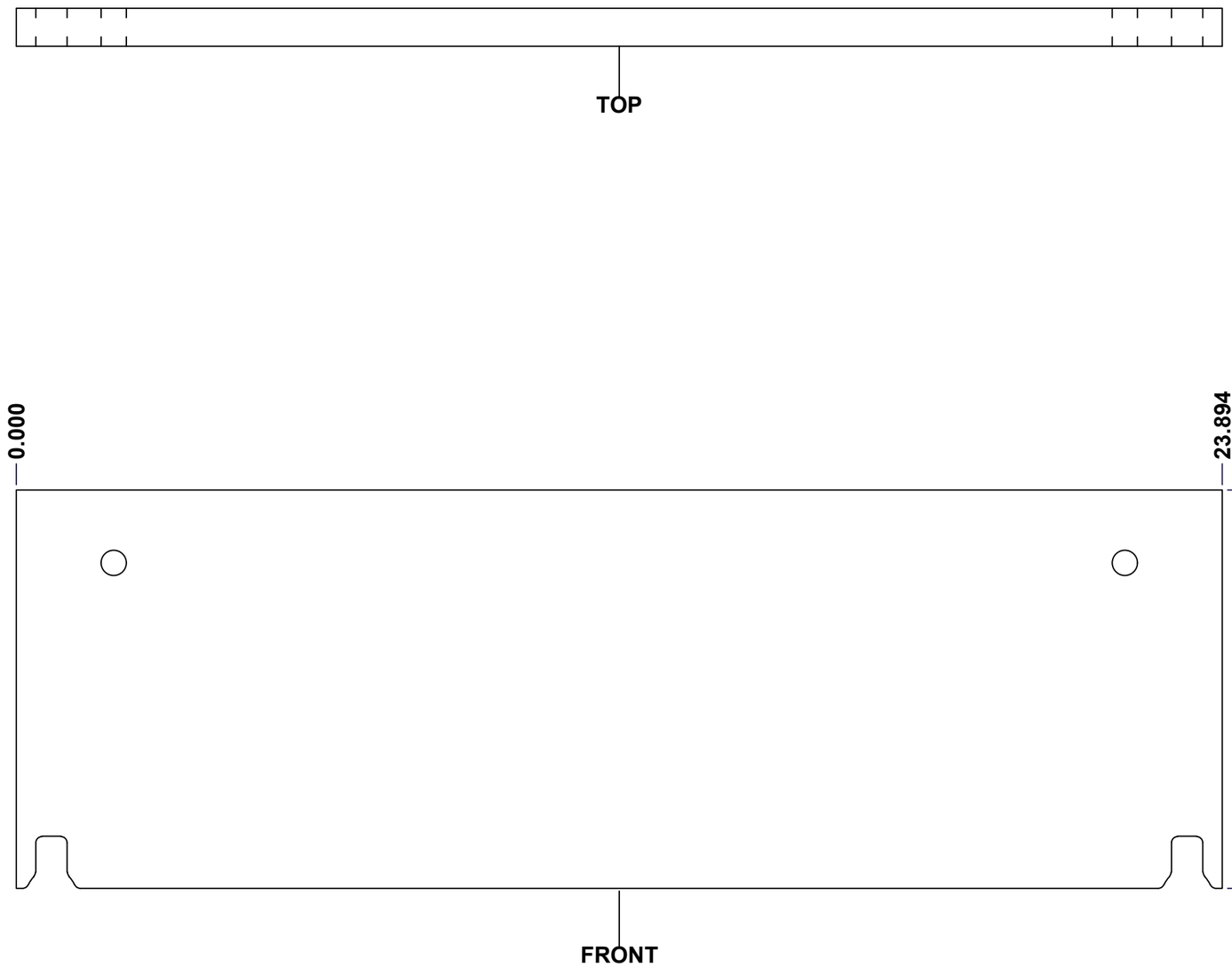

No.	Revisions	Date	By/Par

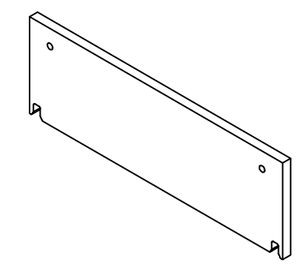

Isometric View

Tél: (450) 979-4373
Fax: (450) 979-4626
www.exmweb.com

Flatness / Aplatissement: Max 3.0mm

Projection

Customer / Client		Date	
Drawn By / Dessiné Par	BoxCad: Patrick Deschenes	Date	23-Jan-07
Material / Matière	Polyisocyanurate		
Color / Couleur	Aluminum	Finish / Fini	N/A
Description	5412ESQT 20" x 24" Top and Bottom Insulation	Detail Rev.	
Part Number / Numéro Pièce	**5412ESQT202408THI-BT**	Rev.	**0**

15 / 16

SEE BILL OF MATERIAL ON LAST PAGE

This drawing is confidential and must not be reproduced or used without the consent of EXM

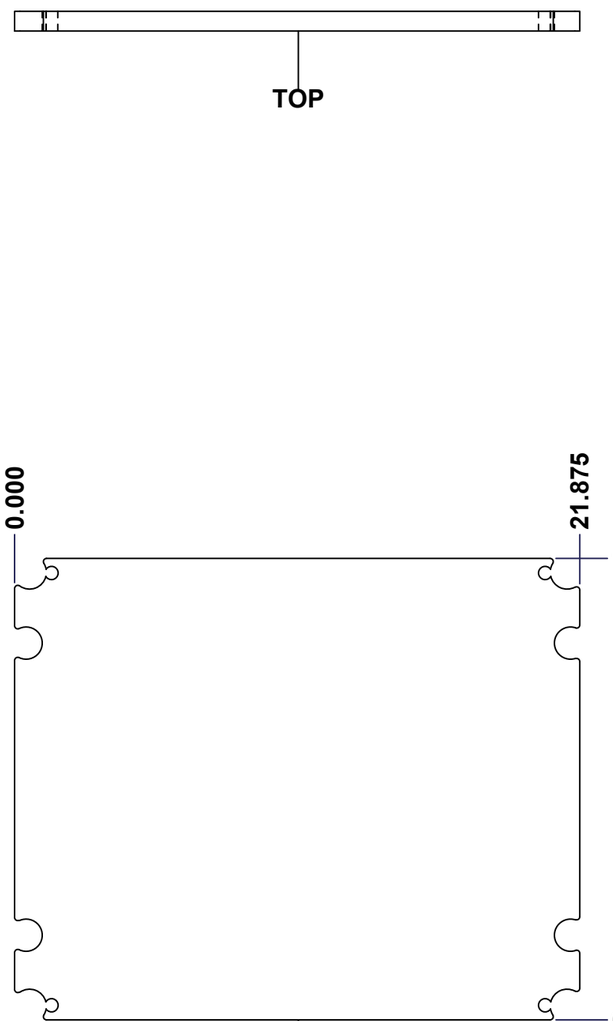

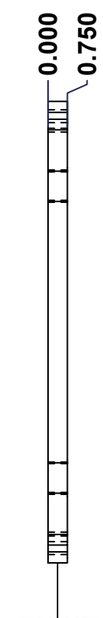

No.	Revisions	Date	By/Par

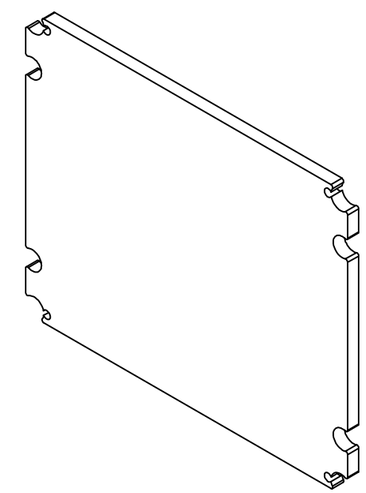

Isometric View

Ce dessin est confidentiel et ne doit pas être reproduit ou utilisé sans le consentement de EXM

Tél: (450) 979-4373
Fax: (450) 979-4626
www.exmweb.com

Flatness / Aplatissement: Max 3.0mm

Projection

Customer / Client		Date	
Drawn By / Dessiné Par	BoxCad: Patrick Deschenes	Date	23-Jan-07
Material / Matière	Polyisocyanurate		
Color / Couleur	Aluminum	Finish / Fini	N/A
Description	5412ESQT 20" x 24" Cover Insulation	Detail Rev.	
Part Number / Numéro Pièce	**5412ESQT202408THI-C**	Rev. **0**	16 / 16

SEE BILL OF MATERIAL ON LAST PAGE

This drawing is confidential and must not be reproduced or used without the consent of EXM

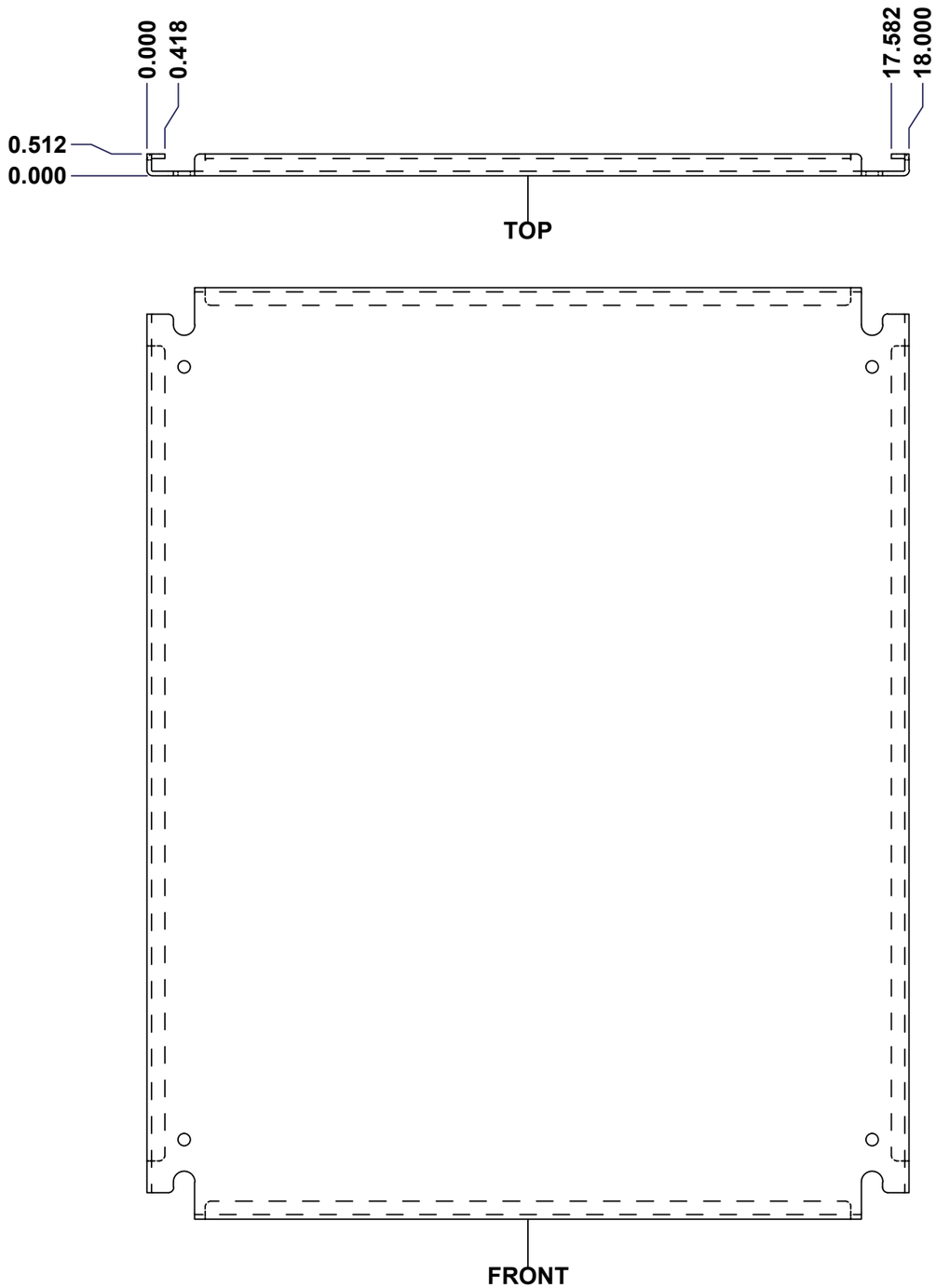

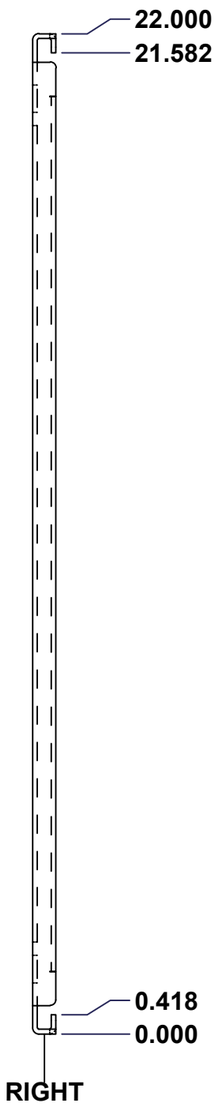

No.	Revisions	Date	By/Par

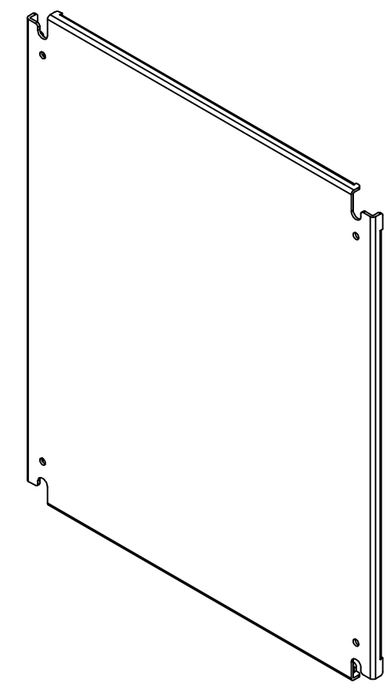

Isometric View

Ce dessin est confidentiel et ne doit pas être reproduit ou utilisé sans le consentement de EXM

Tél: (450) 979-4373
Fax: (450) 979-4626
www.exmweb.com

Flatness / Aplatissement: Max 3.0mm

Projection

Customer / Client		Date	
Drawn By / Dessiné Par	BoxCad	Date	23-Jan-07
Material / Matière	See Part List		
Color / Couleur	See Part List	Finish / Fini	See Part List
Description	881 SP - Inner Panel	Detail Rev.	
Part Number / Numéro Pièce	**881 SP2420G**	Rev.	**0**

1 / 2

Qty	Part Number	Rev	Description	Material	Color	Finish
1	881 SP2420G-P	0	881 SP - Inner Panel Part	12 Ga Galvanized	Unpainted	Galvanized

Parts List

Tolerance ±1/32" unless otherwise specified

C:\Vault_Workspace\Inventor_Dwg\Inv-8\881SP\881SP2420G.idw

Tolérance ±1/32" sauf spécification contraire

This drawing is confidential and must not be reproduced or used without the consent of EXM

Ce dessin est confidentiel et ne doit pas être reproduit ou utilisé sans le consentement de EXM

Table 1

CUT-OUT	XDIM	YDIM	DESCRIPTION
1	0.875	1.875	GROUND HOLE (RND Ø0.290)
2	17.125	1.875	GROUND HOLE (RND Ø0.290)
3	0.875	20.125	GROUND HOLE (RND Ø0.290)
4	17.125	20.125	GROUND HOLE (RND Ø0.290)

FRONT VIEW

All knockouts are actual size / Les disques défonçables sont grandeur réel

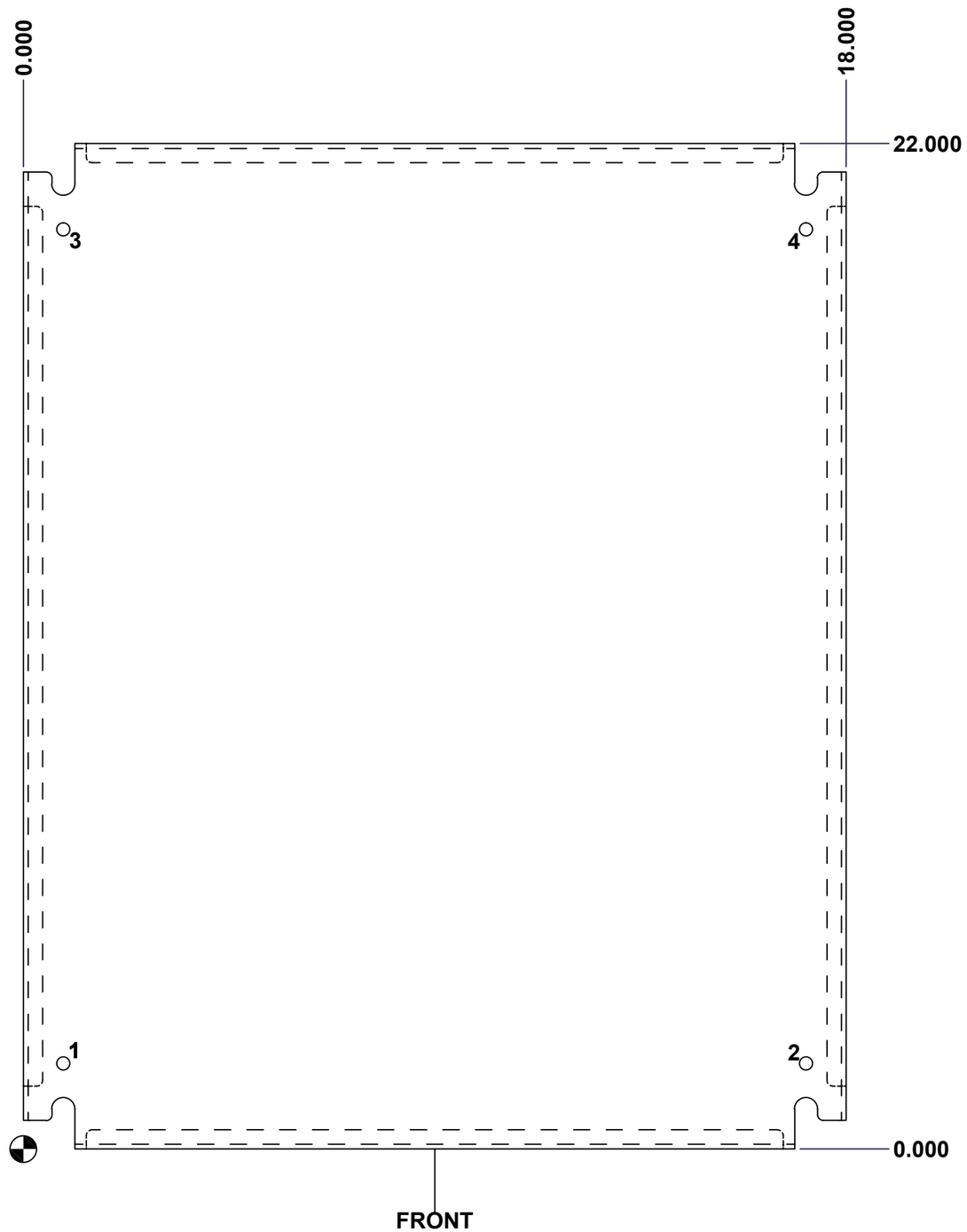

No.	Revisions	Date	By/Par

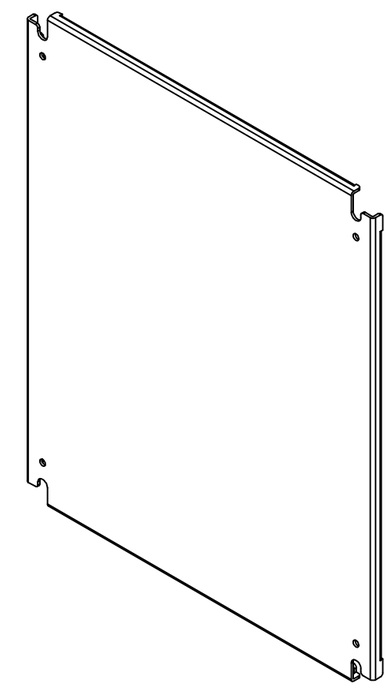

Isometric View

Tél: (450) 979-4373
Fax: (450) 979-4626
www.exmweb.com

Flatness / Aplatissement: Max 3.0mm

Projection

Customer / Client	Date
Drawn By / Dessiné Par: BoxCad	Date: 23-Jan-07
Material / Matière: See Part List	
Color / Couleur: See Part List	Finish / Fini: See Part List
Description: 881 SP - Inner Panel	Detail Rev.
Part Number / Numéro Pièce: **881 SP2420G**	Rev. **0**

2 / 2