This drawing is confidential and must not be reproduced or used without the consent of EXM

Ce dessin est confidentiel et ne doit pas être reproduit ou utilisé sans le consentement de EXM

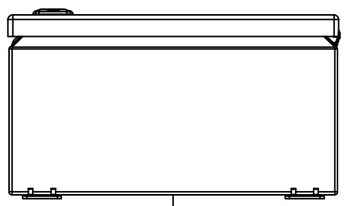

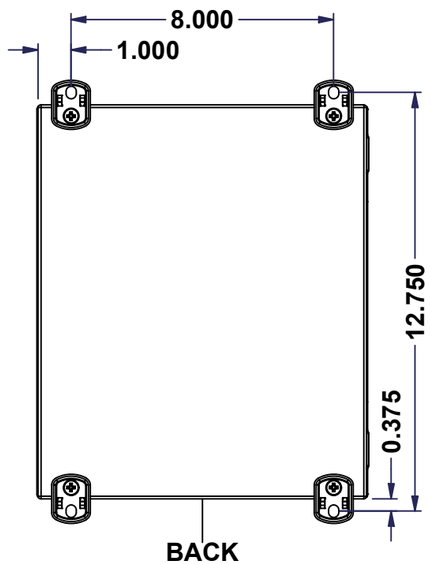

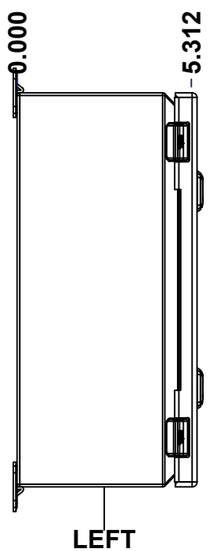

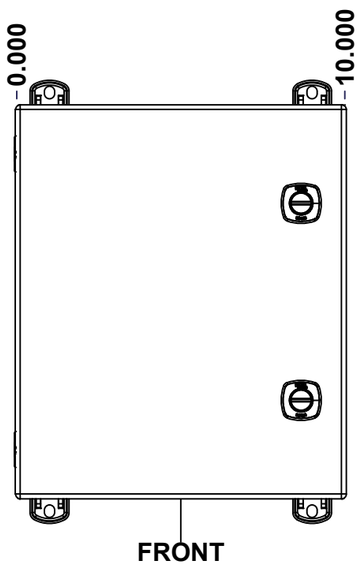

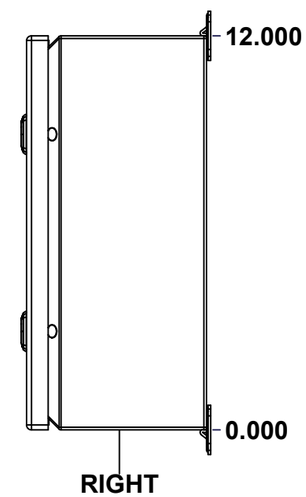

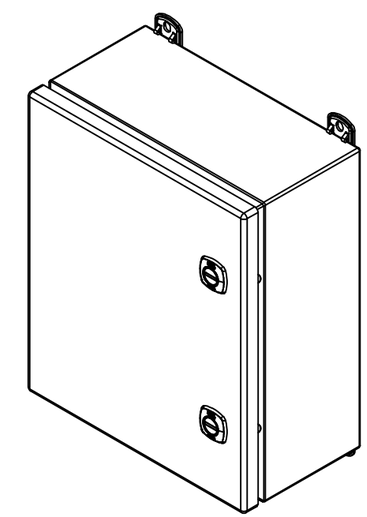

Isometric View

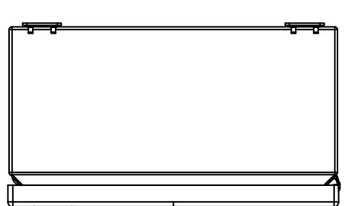

GRAIN DIRECTION:
TOP/BOTTOM: HORIZONTAL
LEFT/RIGHT/BACK/FRONT:VERTICAL

SEE BILL OF MATERIAL ON LAST PAGE

No.	Revisions	Date	By/Par

Tél: (450) 979-4373
Fax: (450) 979-4626
www.exmweb.com

Flatness / Aplatissement: Max 3.0mm

Projection

Customer / Client		Date	
Drawn By / Dessiné Par	BoxCad: BoxCad	Date	16-Nov-14
Material / Matière	16 Ga Stainless Steel 304 (1.4mm)		
Color / Couleur	Unpainted	Finish / Fini	Brushed
Description	5412ESSM 12" x 10" x 5" Assembly	Detail Rev.	
Part Number / Numéro Pièce	**5412ESSM121005**	Rev. **0**	1 / 9

This drawing is confidential and must not be reproduced or used without the consent of EXM

Ce dessin est confidentiel et ne doit pas être reproduit ou utilisé sans le consentement de EXM

NOTE

ITEM	DESCRIPTION
1	NEMA 4X Enclosure (IP66)
2	C/W Standard ground standoffs on box and cover
3	W/O Standard door stiffener
4	C/W Standard inner panel (Included)
5	C/W Standard inner panel mounting standoffs
6	C/W 885 ESCHMF2 Mounting Feet (Installed)

No.	Revisions	Date	By/Par

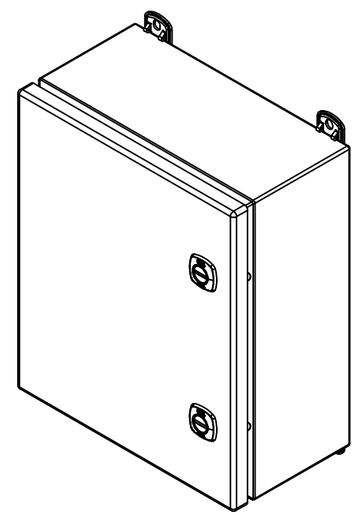

Isometric View

PACKING

ITEM	QTY	DESCRIPTION
STK-E-04316	1	CARTON 5412 ESCH121005
Plastic bag	1	To protect cover surface and inside gasket
Packaging label	1	White label with product number
STK-S-01100	1	ESCH EXM SQUARE STICKER

Parts List

Qty	Part Number	Rev	Description
1	5412ESSM121005C	0	5412ESSM 12" x 10" Cover
1	885 ESSCHMFQ	0	5412 ESSCH Mounting Feet Accessory Kit
1	880 SP1210G	0	880 SP1210G - Inner Panel
1	STK-K-02910	3	5412 ESCH Accessory Kit
1	5412ESSM121005B	0	5412ESSM 12" x 10" x 5" Body
2	STK-A-08126	0	M5 Stainless Steel 316 Nylon Insert Lock Nut with Incorporated Sealing Washer

Tél: (450) 979-4373
Fax: (450) 979-4626
www.exmweb.com

Flatness
Aplatissement
Max 3.0mm

Projection

Customer Client		Date	
Drawn By Dessiné Par	BoxCad: BoxCad	Date	16-Nov-14
Material Matière	16 Ga Stainless Steel 304 (1.4mm)		
Color Couleur	Unpainted	Finish Fini	Brushed
Description 5412ESSM 12" x 10" x 5" Assembly		Detail Rev.	
Part Number Numéro Pièce **5412ESSM121005**		Rev. **0**	2 / 9

Tolerance ±1/32" unless otherwise specified

C:\Vault_Workspace\Inventor_Dwg\BoxCad\Result\5412ESSM121005\5412ESSM121005.idw

Tolérance ±1/32" sauf spécification contraire

This drawing is confidential and must not be reproduced or used without the consent of EXM

Ce dessin est confidentiel et ne doit pas être reproduit ou utilisé sans le consentement de EXM

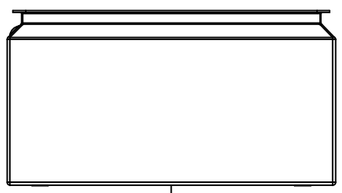

TOP

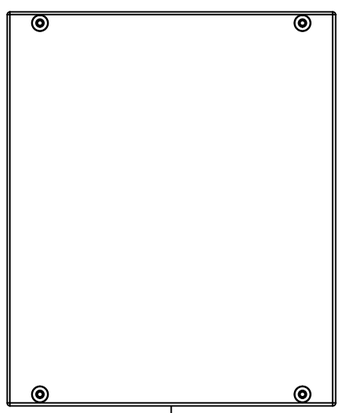

BACK

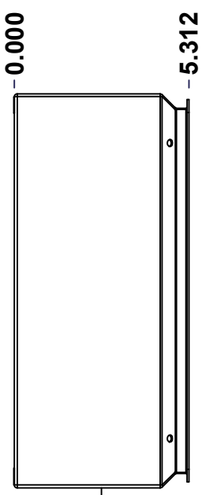

LEFT

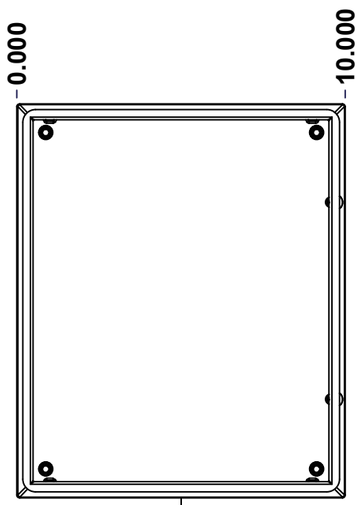

FRONT

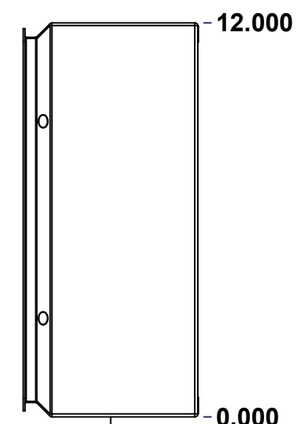

RIGHT

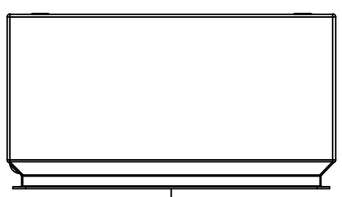

BOTTOM

SEE BILL OF MATERIAL ON LAST PAGE

No.	Revisions	Date	By/Par

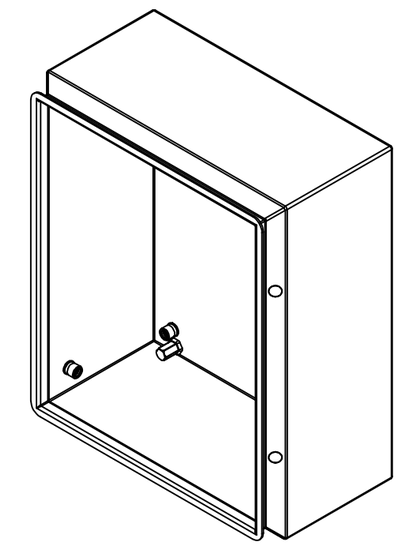

Isometric View

Tél: (450) 979-4373
Fax: (450) 979-4626
www.exmweb.com

Flatness / Aplatissement: Max 3.0mm

Projection

Customer / Client		Date	
Drawn By / Dessiné Par	BoxCad: BoxCad	Date	16-Nov-14
Material / Matière	16 Ga Stainless Steel 304 (1.4mm)		
Color / Couleur	Unpainted	Finish / Fini	Brushed
Description	5412ESSM 12" x 10" x 5" Body	Detail Rev.	
Part Number / Numéro Pièce	5412ESSM121005B	Rev.	0

This drawing is confidential and must not be reproduced or used without the consent of EXM

Ce dessin est confidentiel et ne doit pas être reproduit ou utilisé sans le consentement de EXM

STANDARD FEATURES ARE NOT LISTED IN THIS HOLE TABLE

HOLE TABLE - LEFT VIEW (CUSTOM FEATURE ONLY)

CUT-OUT	XDIM	YDIM	DESCRIPTION
1	3.625	0.875	STANDOFF M6 x 10mm (Inside)

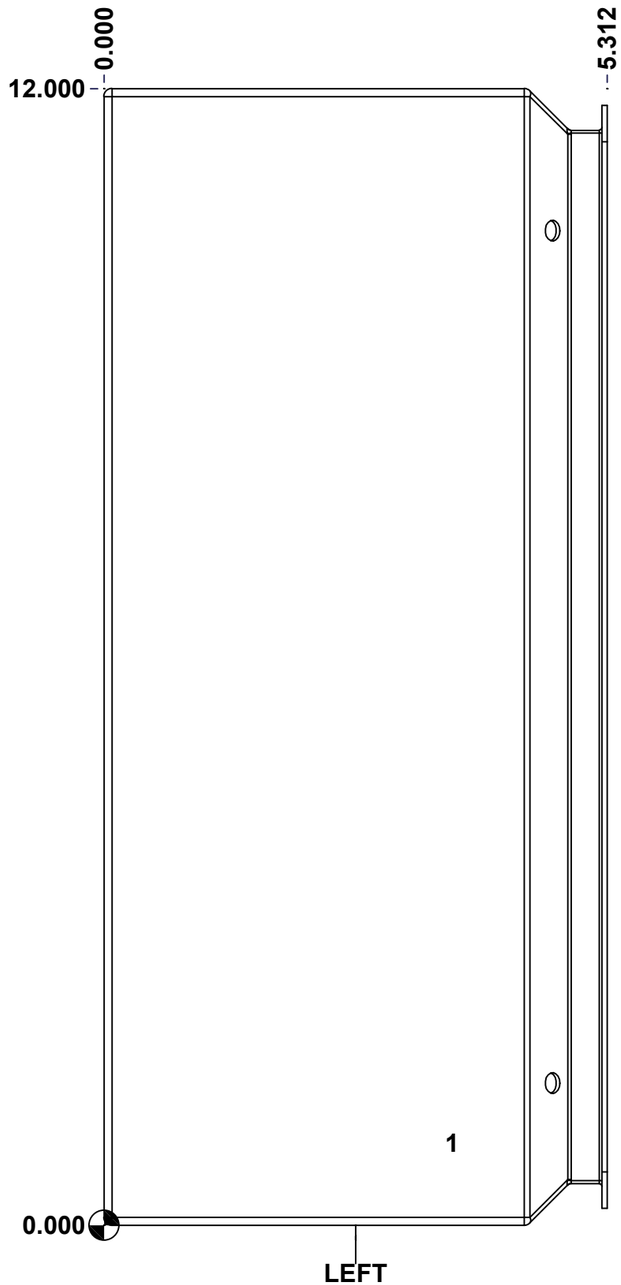

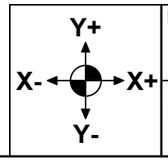

Description	Status
5412ESSM 12" x 10" x 5" Body	(NULL)

Part Number / Numéro Pièce	Rev.	
5412ESSM121005B	**0**	4 / 9

This drawing is confidential and must not be reproduced or used without the consent of EXM

Ce dessin est confidentiel et ne doit pas être reproduit ou utilisé sans le consentement de EXM

STANDARD FEATURES ARE NOT LISTED IN THIS HOLE TABLE

HOLE TABLE - BACK VIEW (CUSTOM FEATURE ONLY)

CUT-OUT	XDIM	YDIM	DESCRIPTION
1	0.875	0.875	IP STANDOFF M6 x 10mm (Inside)
2	0.875	11.125	IP STANDOFF M6 x 10mm (Inside)
3	9.125	11.125	IP STANDOFF M6 x 10mm (Inside)
4	9.125	0.875	IP STANDOFF M6 x 10mm (Inside)
---	---	---	---
5	1.000	12.000	FOOT 885 ESCHMF2
6	9.000	0.000	FOOT 885 ESCHMF2
7	1.000	0.000	FOOT 885 ESCHMF2
8	9.000	12.000	FOOT 885 ESCHMF2
9	1.000	11.656	RIVET NUT M6_FH_CE (Inside)
10	9.000	0.344	RIVET NUT M6_FH_CE (Inside)
11	1.000	0.344	RIVET NUT M6_FH_CE (Inside)
12	9.000	11.656	RIVET NUT M6_FH_CE (Inside)

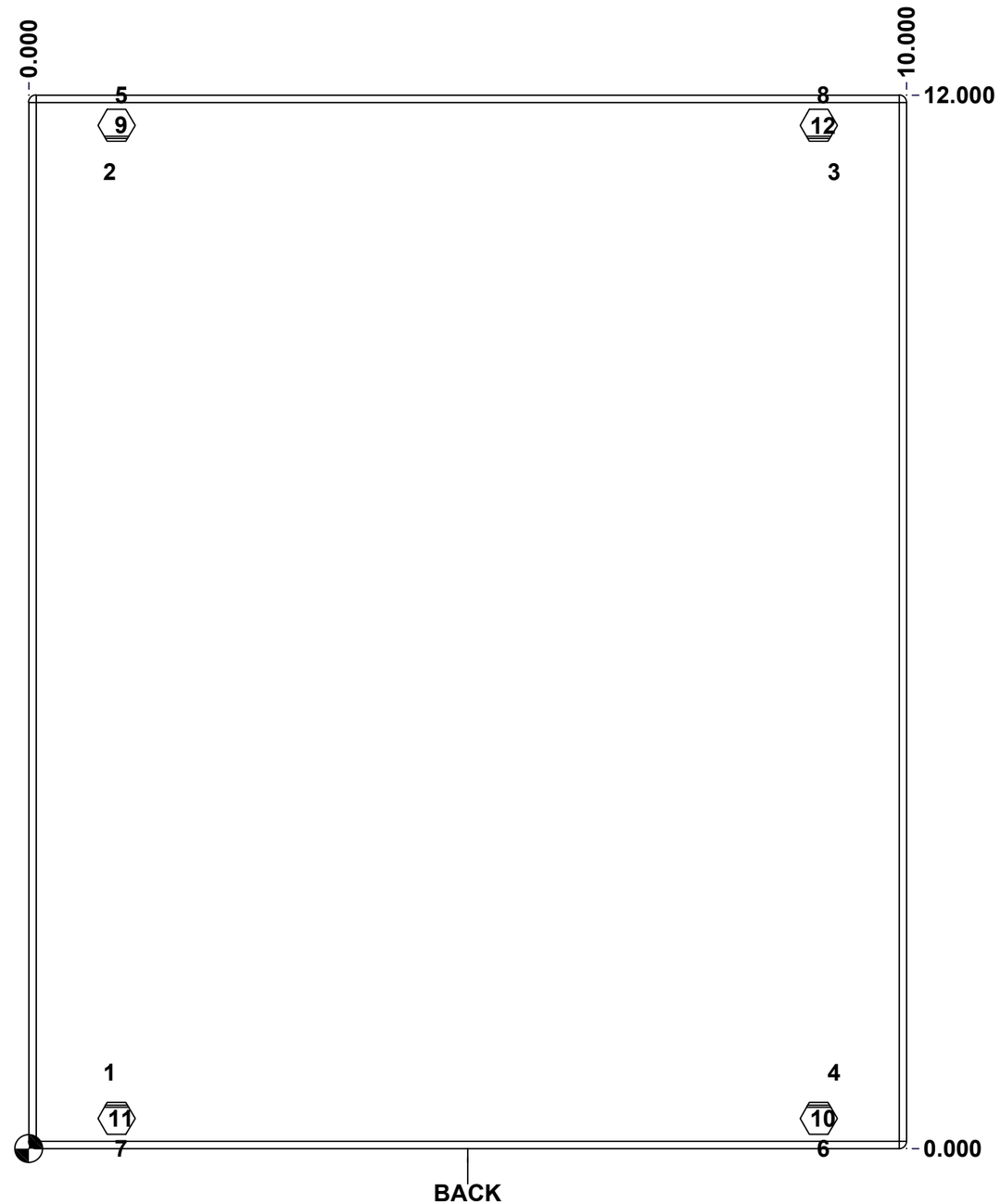

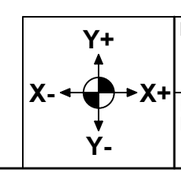

Description	Status
5412ESSM 12" x 10" x 5" Body	(NULL)

Part Number / Numéro Pièce	Rev.	
5412ESSM121005B	**0**	5 / 9

Tolerance ±1/32" unless otherwise specified

C:\Vault_Workspace\Inventor_Dwg\BoxCad\Result\5412ESSM121005\5412ESSM121005.idw

Tolérance ±1/32" sauf spécification contraire

This drawing is confidential and must not be reproduced or used without the consent of EXM

Ce dessin est confidentiel et ne doit pas être reproduit ou utilisé sans le consentement de EXM

No.	Revisions	Date	By/Par

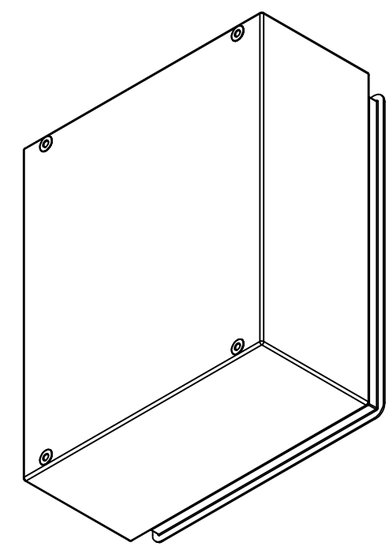

Isometric View

Tél: (450) 979-4373
Fax: (450) 979-4626
www.exmweb.com

Flatness
Aplatissement
Max 3.0mm

Projection

Customer Client		Date	
Drawn By Dessiné Par	BoxCad: BoxCad	Date	16-Nov-14
Material Matière	16 Ga Stainless Steel 304 (1.4mm)		
Color Couleur	Unpainted	Finish Fini	Brushed
Description	5412ESSM 12" x 10" x 5" Body	Detail Rev.	
Part Number Numéro Pièce	**5412ESSM121005B**	Rev. **0**	6 / 9

Qty	Part Number	Rev	Description
4	RIVET_NUT_SS_M6_FH_CE	0	Stainless Steel Rivet Nut M6 (Low Profile Close End)
1	5412ESSM121005B-P	0	5412ESSM 12" x 10" x 5" Body Part
2	STK-Q-00200	0	M5 x 8mm Stainless Steel 316 Carriage Bolt with Nyseal
2	STK-Q-08112	3	M5 Stainless Steel 304 Nylon Insert Dome Nut
5	STK-Q-08500	4	Stainless Steel Standoff M6 x 10mm

Parts List

Tolerance ±1/32" unless otherwise specified

C:\Vault_Workspace\Inventor_Dwg\BoxCad\Result\5412ESSM121005\5412ESSM121005.idw

Tolérance ±1/32" sauf spécification contraire

This drawing is confidential and must not be reproduced or used without the consent of EXM

Ce dessin est confidentiel et ne doit pas être reproduit ou utilisé sans le consentement de EXM

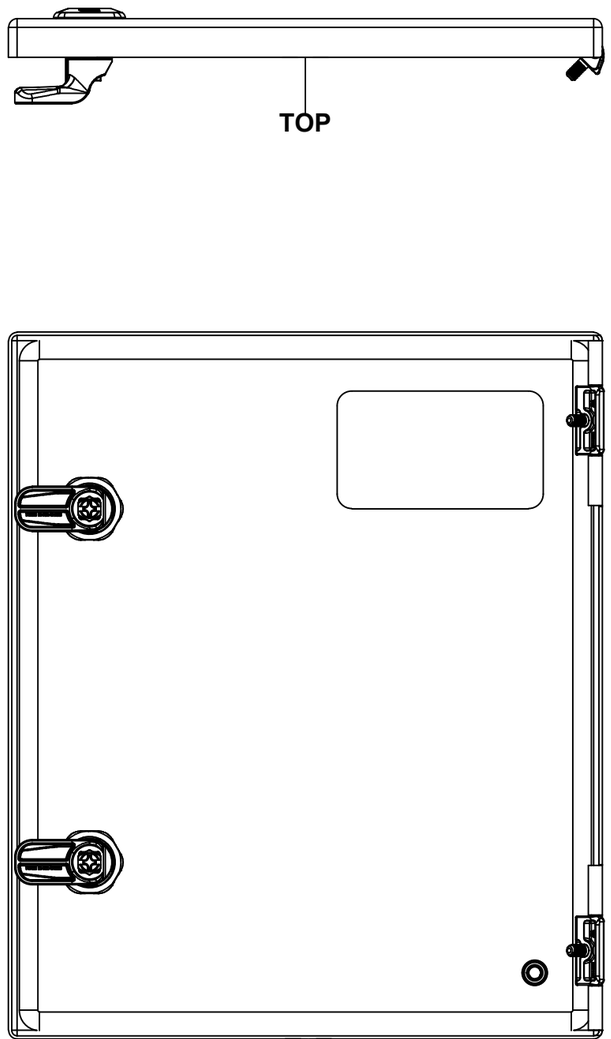

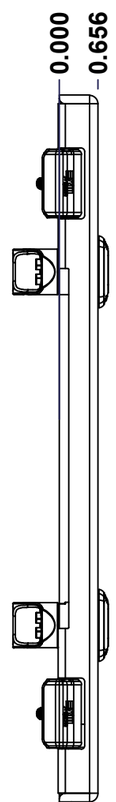

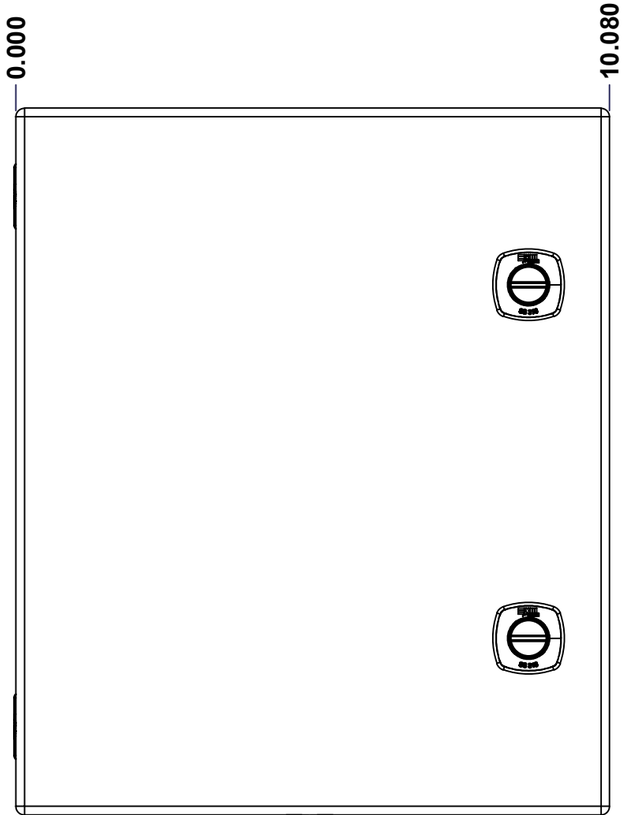

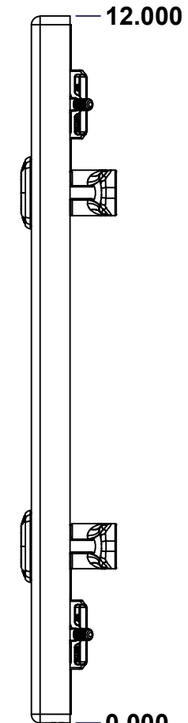

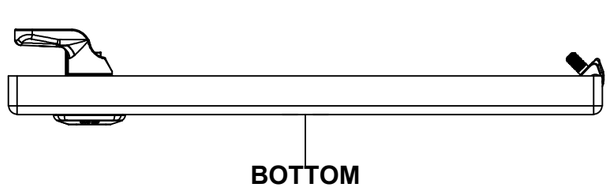

SEE BILL OF MATERIAL ON LAST PAGE

No.	Revisions	Date	By/Par

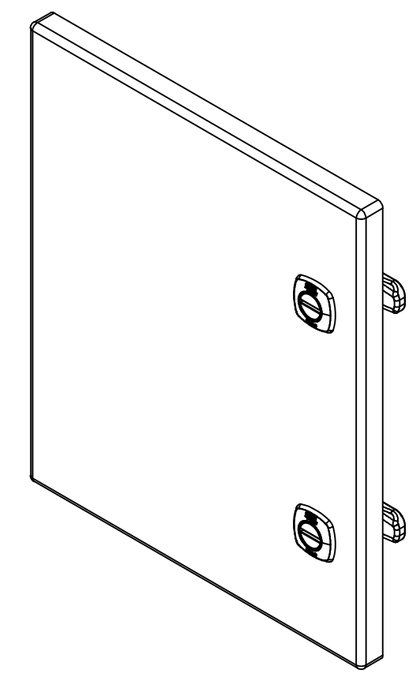

Isometric View

exm
Tél: (450) 979-4373
Fax: (450) 979-4626
www.exmweb.com

Flatness / Aplatissement: Max 3.0mm

Projection

Customer / Client		Date	
Drawn By / Dessiné Par	BoxCad: BoxCad	Date	16-Nov-14
Material / Matière	16 Ga Stainless Steel 304 (1.4mm)		
Color / Couleur	Unpainted	Finish / Fini	Brushed
Description	5412ESSM 12" x 10" Cover	Detail Rev.	
Part Number / Numéro Pièce	5412ESSM121005C	Rev.	0

This drawing is confidential and must not be reproduced or used without the consent of EXM

STANDARD FEATURES ARE NOT LISTED IN THIS HOLE TABLE

HOLE TABLE - FRONT VIEW (CUSTOM FEATURE ONLY)

CUT-OUT	XDIM	YDIM	DESCRIPTION
1	1.145	1.125	STANDOFF M6 x 10mm (Inside)
2	2.750	10.000	LABEL_EXM
3	8.705	3.000	LOCK 880 SCQ4-SLSS6 @ 0.0°
4	8.705	9.000	LOCK 880 SCQ4-SLSS6 @ 0.0°

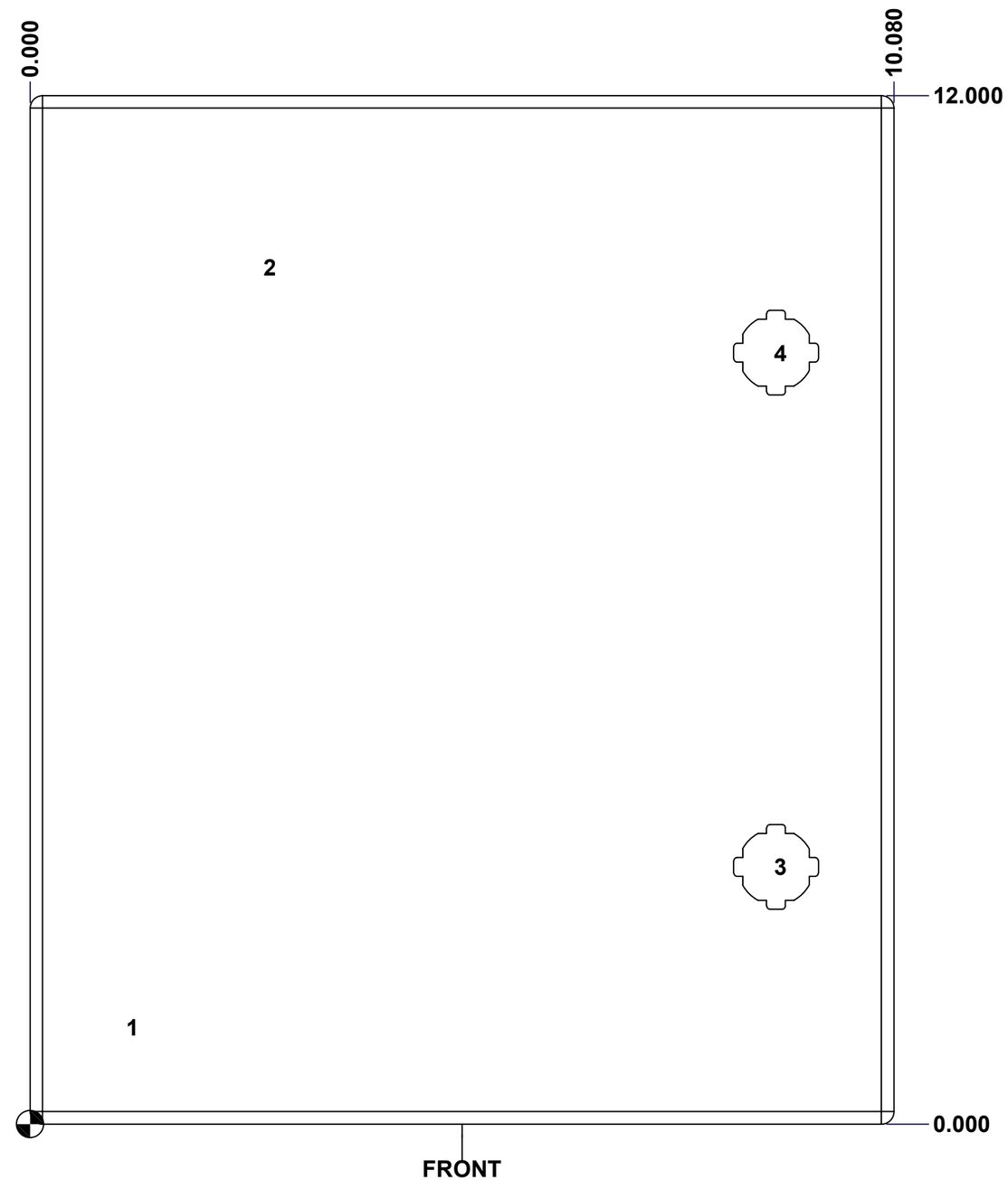

Ce dessin est confidentiel et ne doit pas être reproduit ou utilisé sans le consentement de EXM

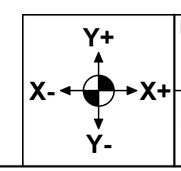

Description	Status
5412ESSM 12" x 10" Cover	(NULL)
Part Number / Numéro Pièce: **5412ESSM121005C**	Rev. **0**

Tolerance ±1/32" unless otherwise specified

C:\Vault_Workspace\Inventor_Dwg\BoxCad\Result\5412ESSM121005\5412ESSM121005.idw

Tolérance ±1/32" sauf spécification contraire

This drawing is confidential and must not be reproduced or used without the consent of EXM

Ce dessin est confidentiel et ne doit pas être reproduit ou utilisé sans le consentement de EXM

No.	Revisions	Date	By/Par

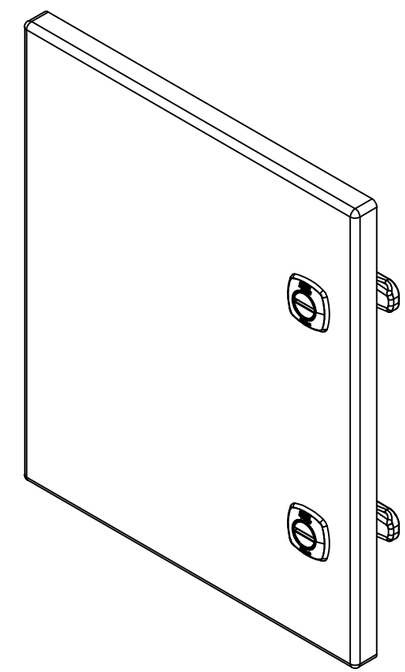

Isometric View

Tél: (450) 979-4373
Fax: (450) 979-4626
www.exmweb.com

Flatness
Aplatissement
Max 3.0mm

Projection

Customer Client		Date	
Drawn By Dessiné Par	BoxCad: BoxCad	Date	16-Nov-14
Material Matière	16 Ga Stainless Steel 304 (1.4mm)		
Color Couleur	Unpainted	Finish Fini	Brushed
Description	5412ESSM 12" x 10" Cover	Detail Rev.	
Part Number Numéro Pièce	**5412ESSM121005C**	Rev. **0**	9 / 9

Qty	Part Number	Rev	Description
1	5412ESSM121005G	0	5412ESSM 12" x 10" Gasket
2	STK-K-12590	7	5412 ESS 1/4 Turn Lock
1	STK-S-00100	0	3.5" x 2" Silver Milar Flexcon Sticker
1	STK-Q-08500	4	Stainless Steel Standoff M6 x 10mm
1	5412ESSM121005C-P	0	5412ESSM 12" x 10" Cover Part
2	STK-A-33038	5	5412 ESSCH Hinge Assembly

Parts List

This drawing is confidential and must not be reproduced or used without the consent of EXM

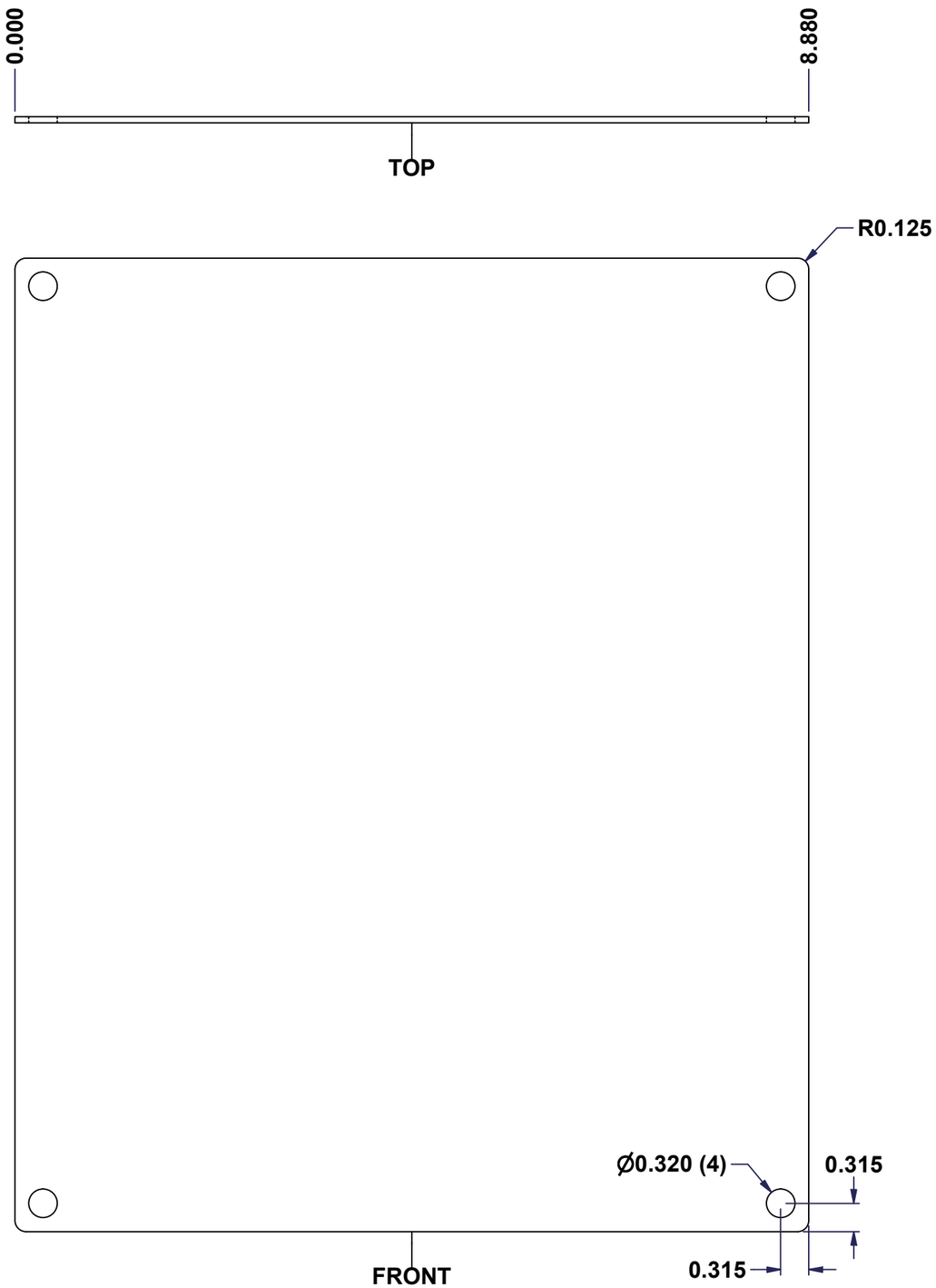

SEE BILL OF MATERIAL ON LAST PAGE

No.	Revisions	Date	By/Par

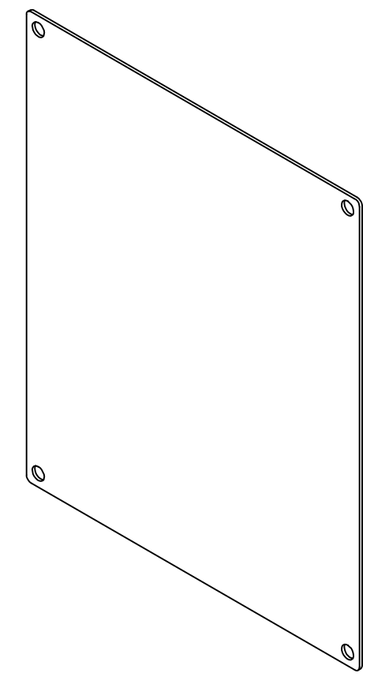

Isometric View

Ce dessin est confidentiel et ne doit pas être reproduit ou utilisé sans le consentement de EXM

Tél: (450) 979-4373
Fax: (450) 979-4626
www.exmweb.com

Flatness / Aplatissement: Max 3.0mm

Projection

Customer / Client		Date	
Drawn By / Dessiné Par	BoxCad	Date	23-Jan-07
Material / Matière	14 Ga Galvanized (1.7mm)		
Color / Couleur	Unpainted	Finish / Fini	Galvanized
Description	880 SP1210G - Inner Panel	Detail Rev.	
Part Number / Numéro Pièce	**880 SP1210G**	Rev. **0**	1 / 2

Tolerance ±1/32" unless otherwise specified

C:\Vault_Workspace\Inventor_Dwg\Inv-8\880SP\880SP1210G.idw

Tolérance ±1/32" sauf spécification contraire

This drawing is confidential and must not be reproduced or used without the consent of EXM

Ce dessin est confidentiel et ne doit pas être reproduit ou utilisé sans le consentement de EXM

No.	Revisions	Date	By/Par

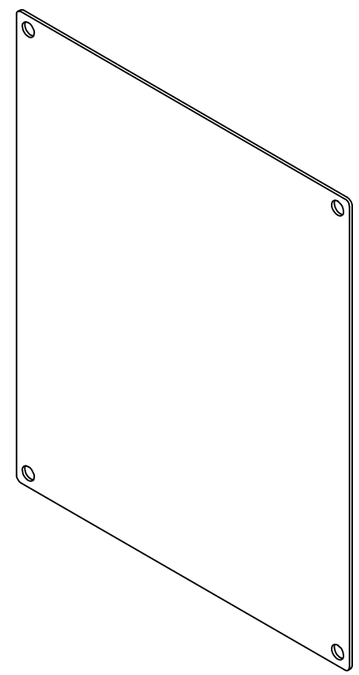

Isometric View

Tél: (450) 979-4373
Fax: (450) 979-4626
www.exmweb.com

Flatness
Aplatissement
Max 3.0mm

Projection

Customer
Client

Date

Drawn By
Dessiné Par: BoxCad

Date: 23-Jan-07

Material
Matière: 14 Ga Galvanized (1.7mm)

Color
Couleur: Unpainted

Finish
Fini: Galvanized

Description
880 SP1210G - Inner Panel

Detail Rev.

Part Number
Numéro Pièce
880 SP1210G

Rev.
0

2 / 2

Qty	Part Number	Rev	Description
1	880 SP1210G-P	0	880 SP1210G - Inner Panel Part

Parts List