This drawing is confidential and must not be reproduced or used without the consent of EXM

Ce dessin est confidentiel et ne doit pas être reproduit ou utilisé sans le consentement de EXM

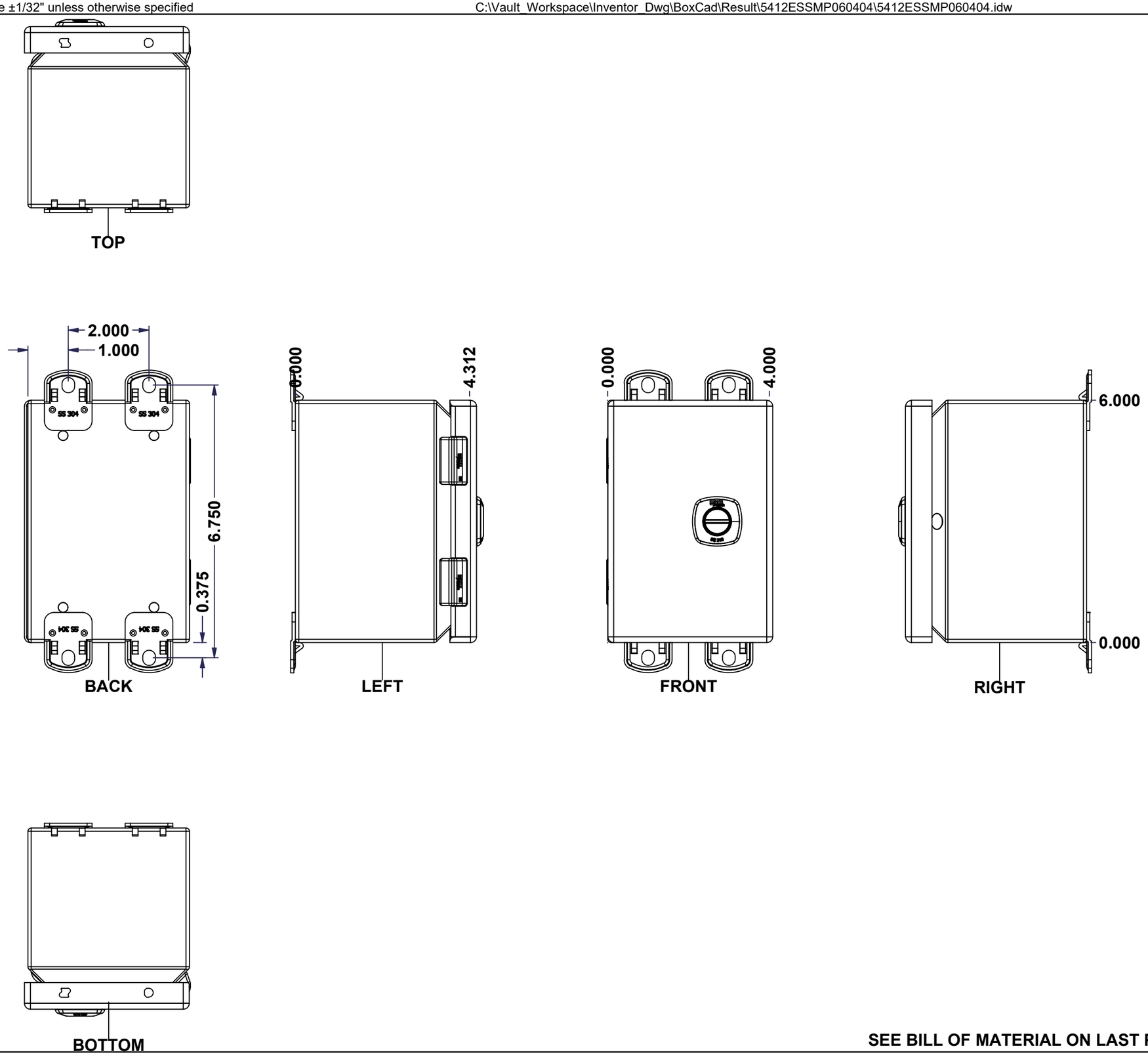

No.	Revisions	Date	By/Par

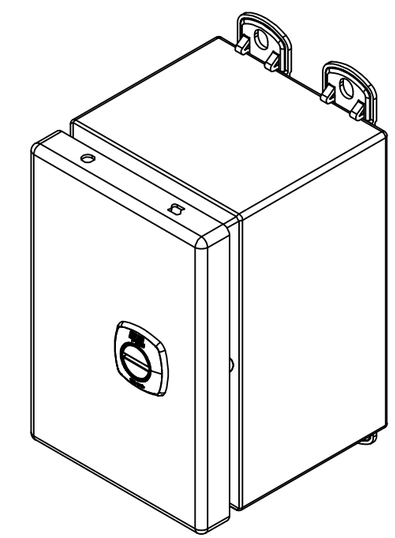

Isometric View

Tél: (450) 979-4373
Fax: (450) 979-4626
www.exmweb.com

Flatness
Aplatissement
Max 3.0mm

Projection

Customer / Client		Date	
Drawn By / Dessiné Par	BoxCad: BoxCad	Date	18-Nov-14
Material / Matière	16 Ga Stainless Steel 304 (1.4mm)		
Color / Couleur	Asa-61 Grey	Finish / Fini	Smooth
Description	5412ESSMP 6" x 4" x 4" Assembly	Detail Rev.	
Part Number / Numéro Pièce	**5412ESSMP060404**	Rev. **0**	1 / 10

SEE BILL OF MATERIAL ON LAST PAGE

This drawing is confidential and must not be reproduced or used without the consent of EXM

Ce dessin est confidentiel et ne doit pas être reproduit ou utilisé sans le consentement de EXM

NOTE

ITEM	DESCRIPTION
1	NEMA 4X Enclosure
2	C/W Standard ground standoffs on box and cover
3	W/O Standard door stiffener
4	C/W Standard inner panel (Included)
5	C/W Standard inner panel mounting standoffs
6	C/W 885 ESCHMF2 Mounting Feet (Welded)

No.	Revisions	Date	By/Par

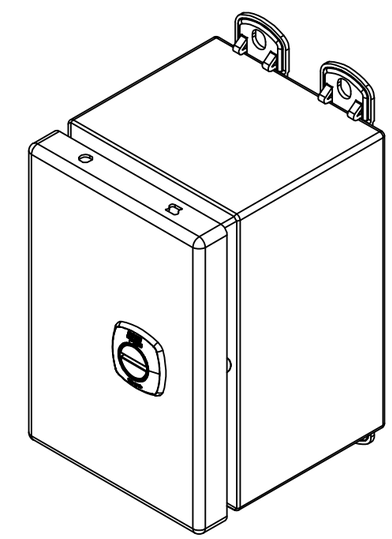

Isometric View

PACKING

ITEM	QTY	DESCRIPTION
STK-E-04302	1	CARTON 5412 ESCH060404
Plastic bag	1	To protect cover surface and inside gasket
Packaging label	1	White label with product number
STK-S-01100	1	ESCH EXM SQUARE STICKER

Qty	Part Number	Rev	Description
1	5412ESSMP060404C	0	5412ESSMP 6" x 4" Cover
1	STK-K-02910	3	5412 ESCH Accessory Kit
8	STK-Q-07200	0	Flange Lock Nut
1	880 SP0604G	0	880 SP0604G - Inner Panel
1	5412ESSMP060404B	0	5412ESSMP 6" x 4" x 4" Body
2	STK-Q-08100	1	M5 Nylon Insert Lock Nut
2	STK-Q-10249	0	M5 Sealing Washer

Parts List

Tél: (450) 979-4373
Fax: (450) 979-4626
www.exmweb.com

Flatness / Aplatissement: Max 3.0mm

Projection

Customer / Client		Date	
Drawn By / Dessiné Par	BoxCad: BoxCad	Date	18-Nov-14
Material / Matière	16 Ga Stainless Steel 304 (1.4mm)		
Color / Couleur	Asa-61 Grey	Finish / Fini	Smooth
Description	5412ESSMP 6" x 4" x 4" Assembly	Detail Rev.	
Part Number / Numéro Pièce	**5412ESSMP060404**	Rev.	**0**

2 / 10

Tolerance ±1/32" unless otherwise specified

C:\Vault_Workspace\Inventor_Dwg\BoxCad\Result\5412ESSMP060404\5412ESSMP060404.idw

Tolérance ±1/32" sauf spécification contraire

This drawing is confidential and must not be reproduced or used without the consent of EXM

Ce dessin est confidentiel et ne doit pas être reproduit ou utilisé sans le consentement de EXM

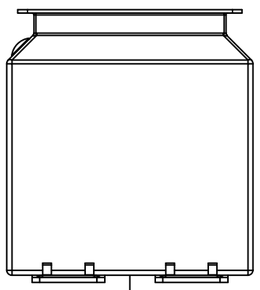

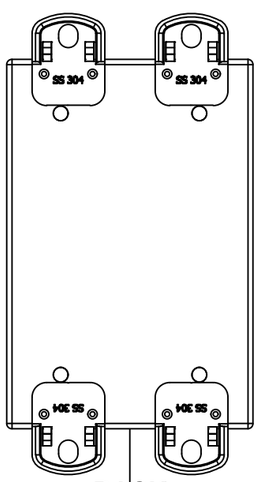

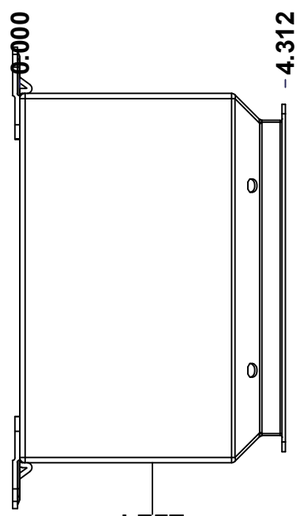

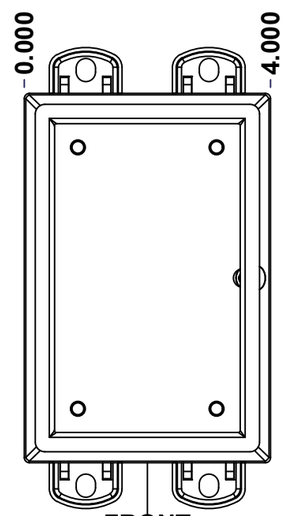

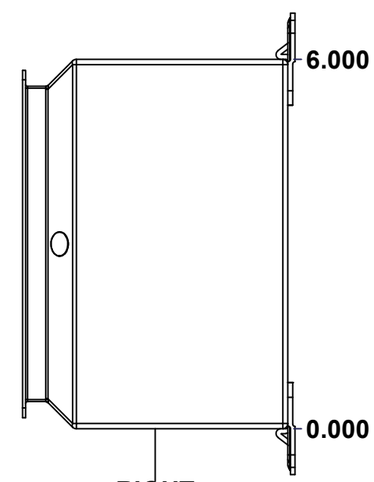

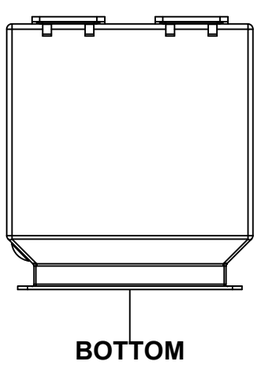

SEE BILL OF MATERIAL ON LAST PAGE

No.	Revisions	Date	By/Par

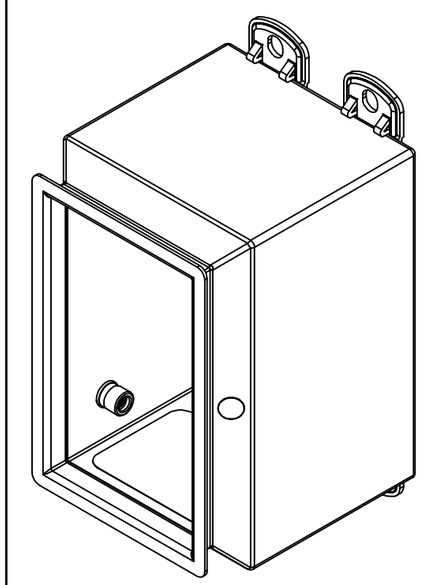

Isometric View

exm
Tél: (450) 979-4373
Fax: (450) 979-4626
www.exmweb.com

Flatness / Aplatissement: Max 3.0mm

Projection

Customer / Client		Date	
Drawn By / Dessiné Par	BoxCad: BoxCad	Date	18-Nov-14
Material / Matière	16 Ga Stainless Steel 304 (1.4mm)		
Color / Couleur	Asa-61 Grey	Finish / Fini	Smooth
Description	5412ESSMP 6" x 4" x 4" Body	Detail Rev.	
Part Number / Numéro Pièce	**5412ESSMP060404B**	Rev. **0**	3 / 10

This drawing is confidential and must not be reproduced or used without the consent of EXM

Ce dessin est confidentiel et ne doit pas être reproduit ou utilisé sans le consentement de EXM

STANDARD FEATURES ARE NOT LISTED IN THIS HOLE TABLE

HOLE TABLE - BOTTOM VIEW (CUSTOM FEATURE ONLY)

CUT-OUT	XDIM	YDIM	DESCRIPTION
1	2.000	2.250	LABEL_EXM

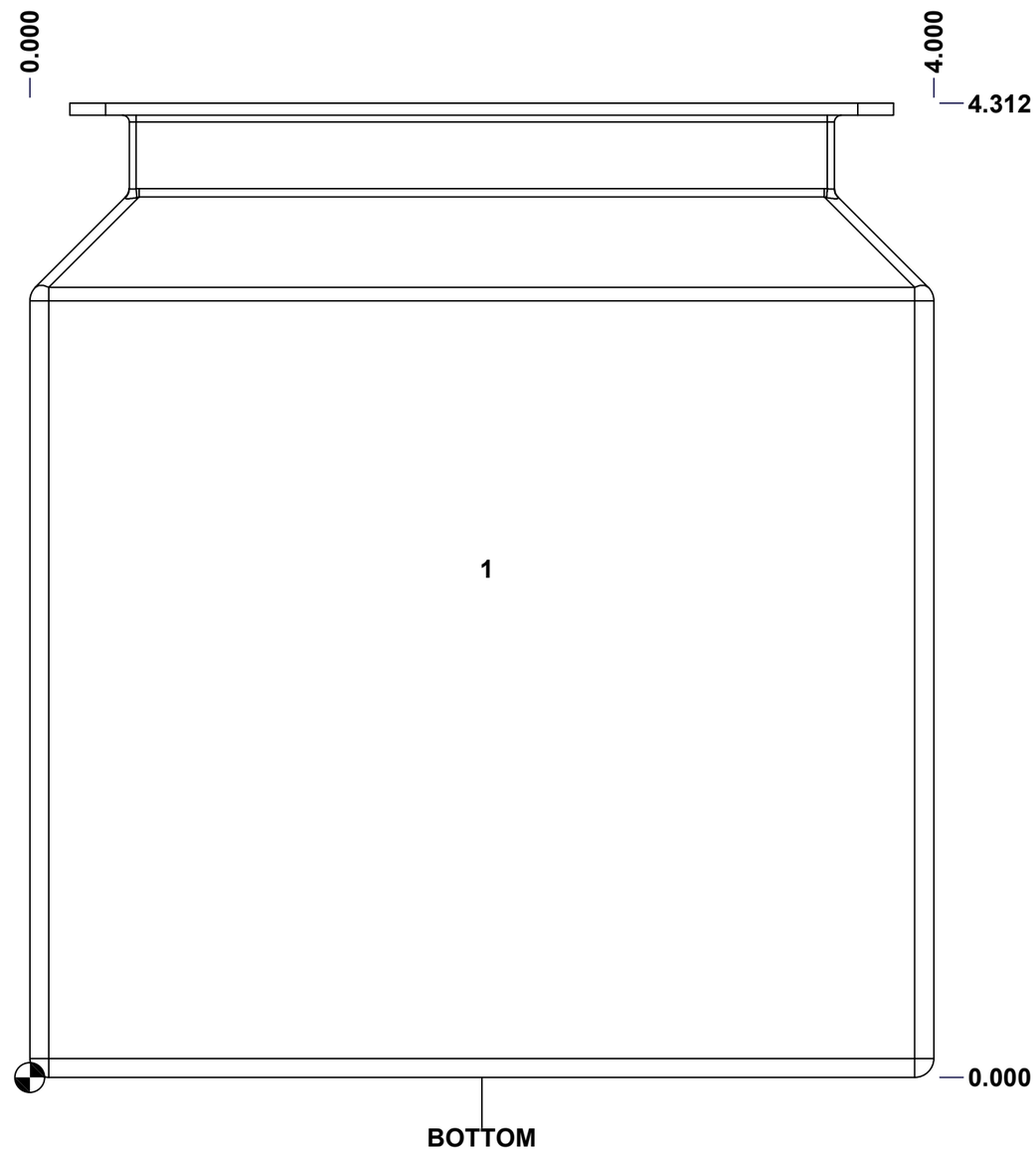

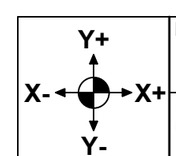

Description	Status
5412ESSMP 6" x 4" x 4" Body	(NULL)

Part Number / Numéro Pièce	Rev.	
5412ESSMP060404B	**0**	4 / 10

This drawing is confidential and must not be reproduced or used without the consent of EXM

Ce dessin est confidentiel et ne doit pas être reproduit ou utilisé sans le consentement de EXM

STANDARD FEATURES ARE NOT LISTED IN THIS HOLE TABLE

HOLE TABLE - LEFT VIEW (CUSTOM FEATURE ONLY)

CUT-OUT	XDIM	YDIM	DESCRIPTION
1	2.625	0.875	STANDOFF M6 x 10mm (Inside)

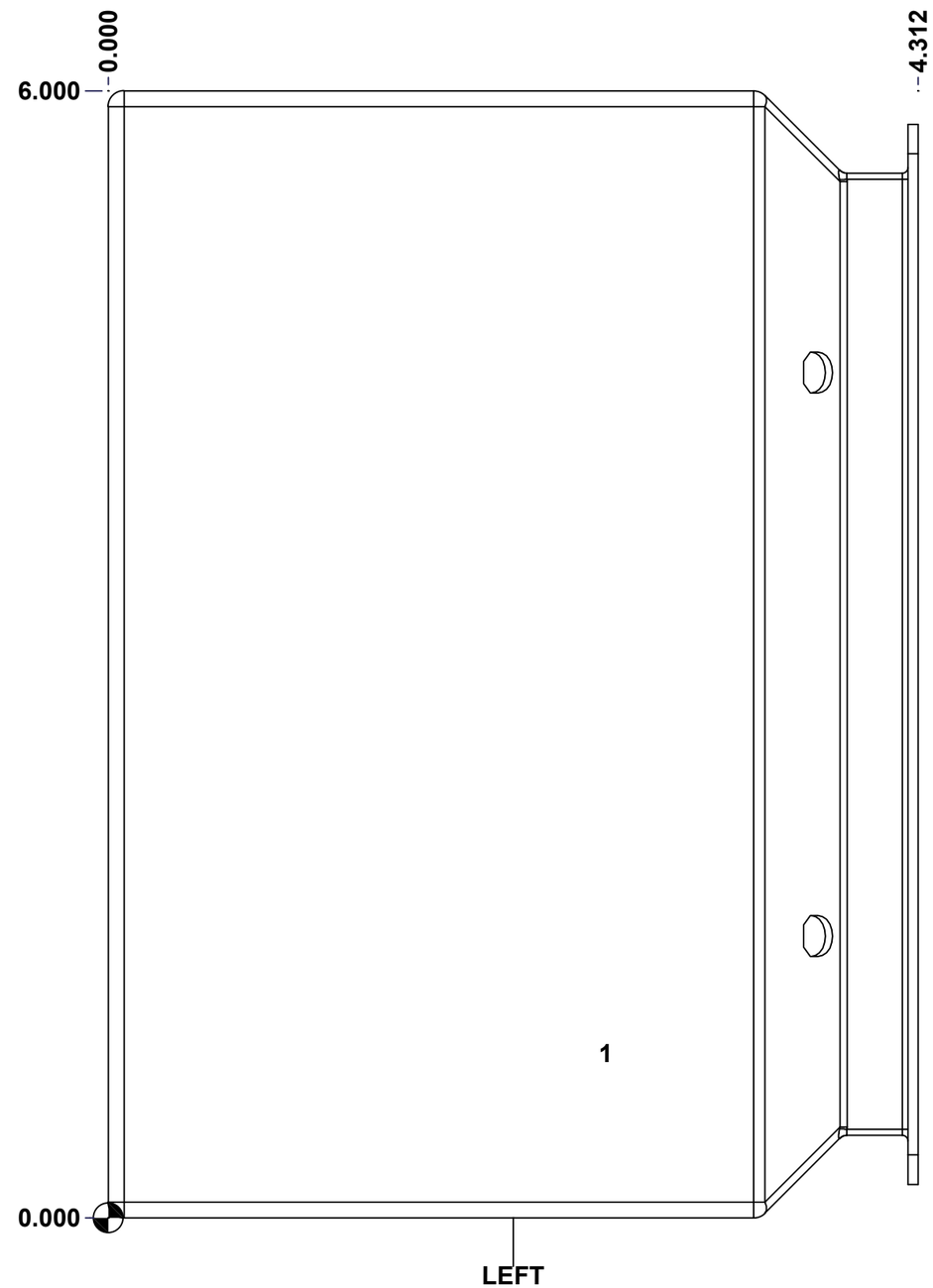

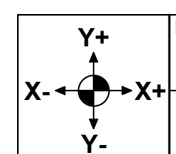

Description	Status
5412ESSMP 6" x 4" x 4" Body	(NULL)

Part Number / Numéro Pièce	Rev.	
5412ESSMP060404B	**0**	5 / 10

This drawing is confidential and must not be reproduced or used without the consent of EXM

Ce dessin est confidentiel et ne doit pas être reproduit ou utilisé sans le consentement de EXM

STANDARD FEATURES ARE NOT LISTED IN THIS HOLE TABLE

HOLE TABLE - BACK VIEW (CUSTOM FEATURE ONLY)

CUT-OUT	XDIM	YDIM	DESCRIPTION
1	3.000	0.000	FOOT 885 ESCHMF2
2	1.000	0.000	FOOT 885 ESCHMF2
3	3.000	6.000	FOOT 885 ESCHMF2
4	1.000	6.000	FOOT 885 ESCHMF2
5	0.875	5.125	PEM FHS-M6-20 (Inside)
6	3.125	5.125	PEM FHS-M6-20 (Inside)
7	3.125	0.875	PEM FHS-M6-20 (Inside)
8	0.875	0.875	PEM FHS-M6-20 (Inside)

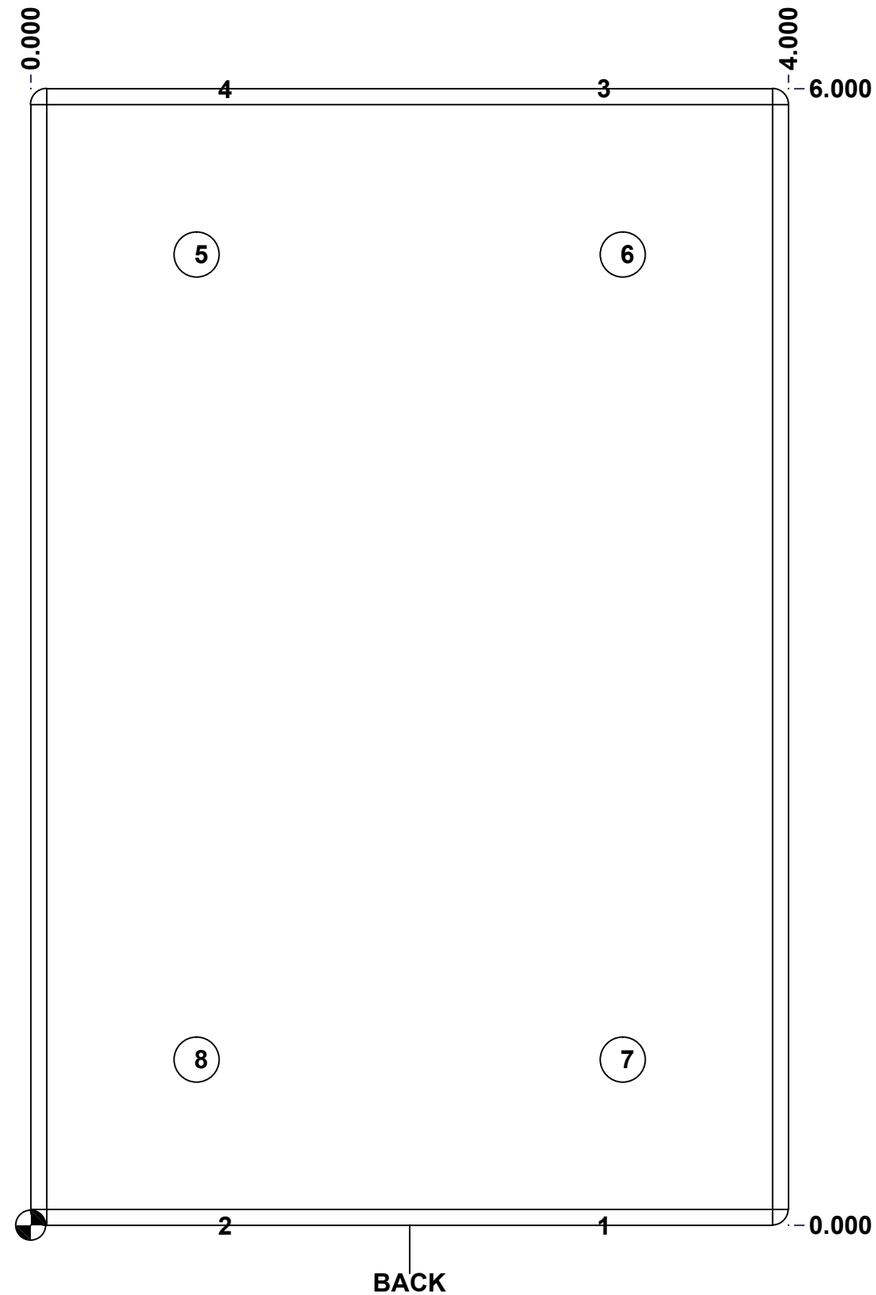

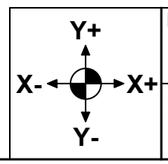

Description	Status
5412ESSMP 6" x 4" x 4" Body	(NULL)

Part Number / Numéro Pièce	Rev.	
5412ESSMP060404B	**0**	6 / 10

Tolerance ±1/32" unless otherwise specified

C:\Vault_Workspace\Inventor_Dwg\BoxCad\Result\5412ESSMP060404\5412ESSMP060404.idw

Tolérance ±1/32" sauf spécification contraire

This drawing is confidential and must not be reproduced or used without the consent of EXM

Ce dessin est confidentiel et ne doit pas être reproduit ou utilisé sans le consentement de EXM

No.	Revisions	Date	By/Par

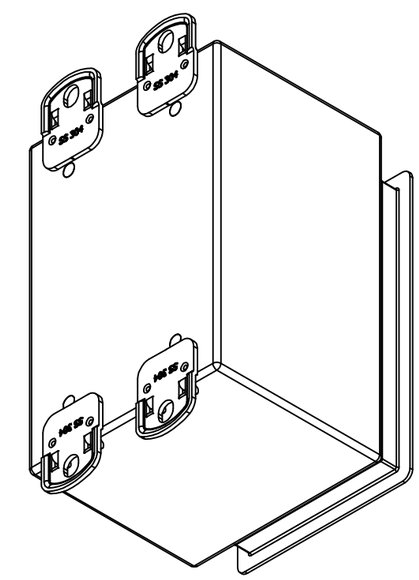

Isometric View

Qty	Part Number	Rev	Description
4	STK-PEM-FHS-M6-20	0	SS PEM Self-Clinching Stud M6 x 20.0mm
1	STK-Q-00200	0	M5 x 8mm Stainless Steel 316 Carriage Bolt with Nyseal
1	STK-Q-08112	3	M5 Stainless Steel 304 Nylon Insert Dome Nut
1	STK-S-00100	0	3.5" x 2" Silver Milar Flexcon Sticker
4	STK-Q-71316	4	5412 ESSMCH Stainless Steel Mounting Foot
1	5412ESSMP060404B-P	0	5412ESSMP 6" x 4" x 4" Body Part
1	STK-Q-08500	4	Stainless Steel Standoff M6 x 10mm
1	STK-P-02400S	0	Powder Paint (Asa-61 Grey / Smooth)

Parts List

Tél: (450) 979-4373
Fax: (450) 979-4626
www.exmweb.com

Flatness / Aplatissement: Max 3.0mm

Projection

Customer / Client

Date

Drawn By / Dessiné Par: BoxCad: BoxCad

Date: 18-Nov-14

Material / Matière: 16 Ga Stainless Steel 304 (1.4mm)

Color / Couleur: Asa-61 Grey

Finish / Fini: Smooth

Description: 5412ESSMP 6" x 4" x 4" Body

Detail Rev.

Part Number / Numéro Pièce: **5412ESSMP060404B**

Rev.: **0**

7 / 10

This drawing is confidential and must not be reproduced or used without the consent of EXM

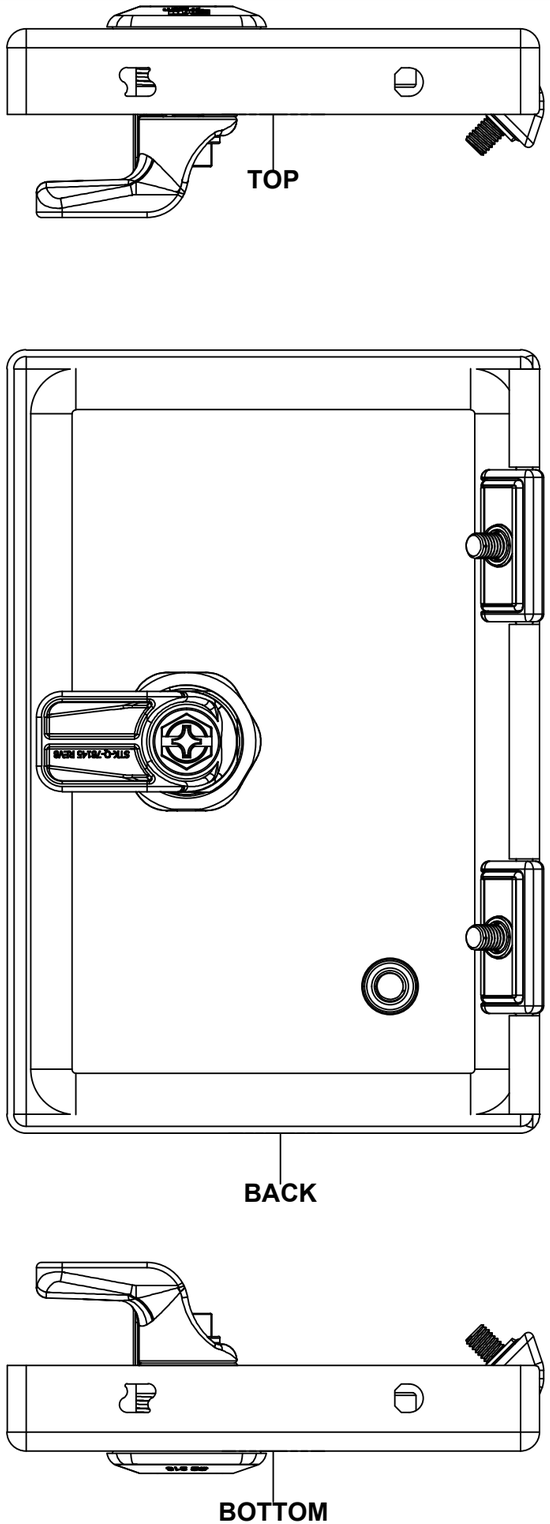

SEE BILL OF MATERIAL ON LAST PAGE

No.	Revisions	Date	By/Par

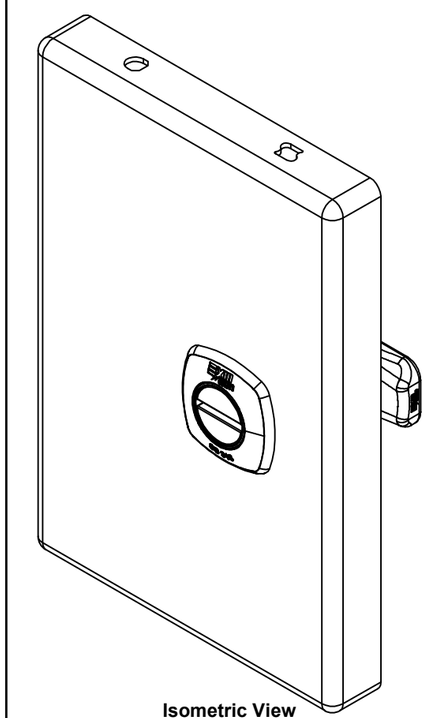

Ce dessin est confidentiel et ne doit pas être reproduit ou utilisé sans le consentement de EXM

Tél: (450) 979-4373
Fax: (450) 979-4626
www.exmweb.com

Flatness / Aplatissement: Max 3.0mm

Projection

Customer / Client		Date	
Drawn By / Dessiné Par	BoxCad: BoxCad	Date	18-Nov-14
Material / Matière	16 Ga Stainless Steel 304 (1.4mm)		
Color / Couleur	Asa-61 Grey	Finish / Fini	Smooth
Description	5412ESSMP 6" x 4" Cover	Detail Rev.	
Part Number / Numéro Pièce	**5412ESSMP060404C**	Rev.	**0**

8 / 10

This drawing is confidential and must not be reproduced or used without the consent of EXM

Ce dessin est confidentiel et ne doit pas être reproduit ou utilisé sans le consentement de EXM

STANDARD FEATURES ARE NOT LISTED IN THIS HOLE TABLE

HOLE TABLE - FRONT VIEW (CUSTOM FEATURE ONLY)

CUT-OUT	XDIM	YDIM	DESCRIPTION
1	1.145	1.125	STANDOFF M6 x 10mm (Inside)
2	2.705	3.000	LOCK 880 SCQ4-SLSS6 @ 0.0°

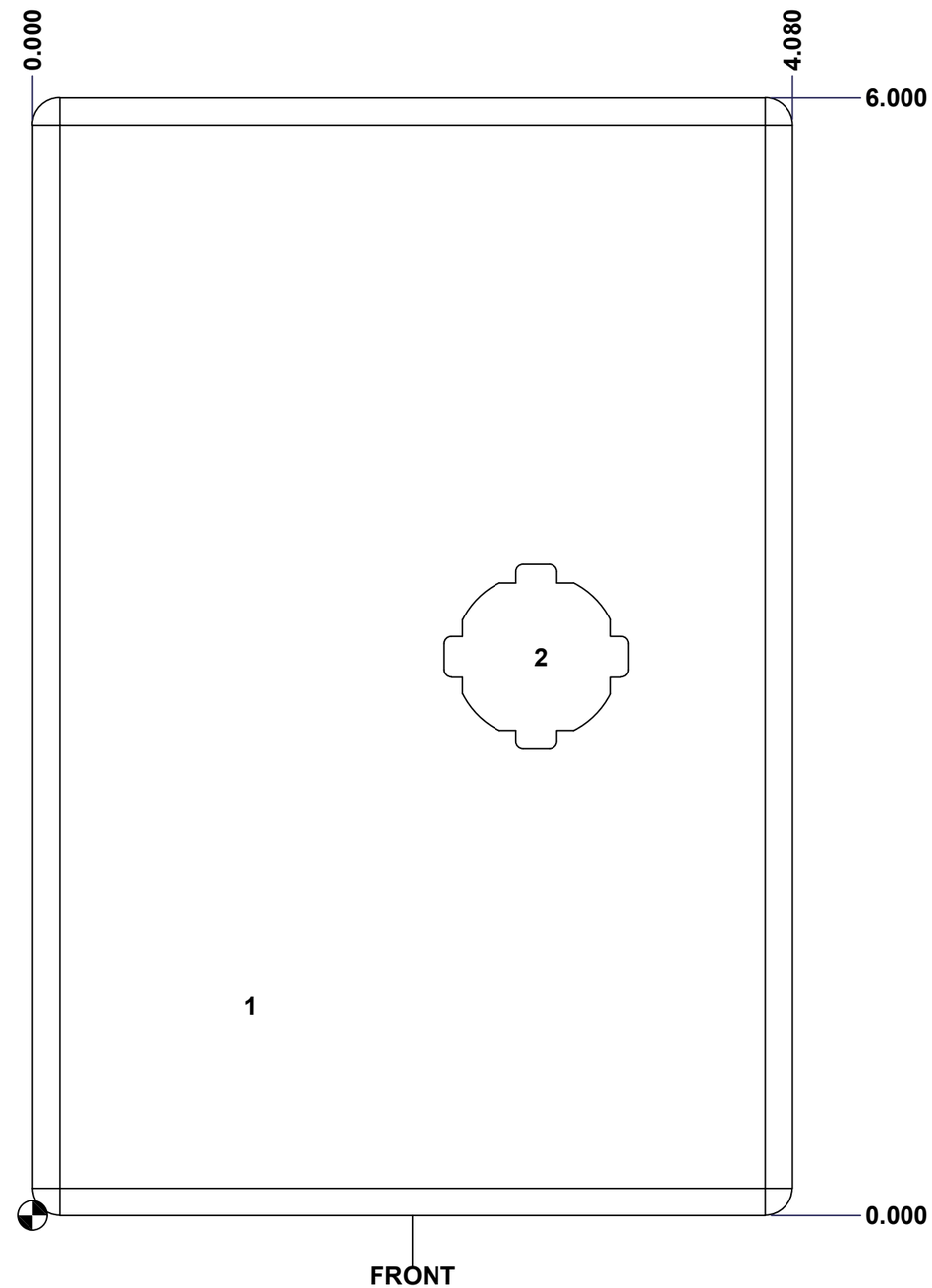

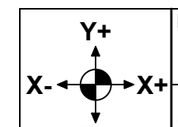

Description	Status
5412ESSMP 6" x 4" Cover	(NULL)
Part Number / Numéro Pièce: **5412ESSMP060404C**	Rev. **0**

Tolerance ±1/32" unless otherwise specified

C:\Vault_Workspace\Inventor_Dwg\BoxCad\Result\5412ESSMP060404\5412ESSMP060404.idw

Tolérance ±1/32" sauf spécification contraire

This drawing is confidential and must not be reproduced or used without the consent of EXM

Ce dessin est confidentiel et ne doit pas être reproduit ou utilisé sans le consentement de EXM

No.	Revisions	Date	By/Par

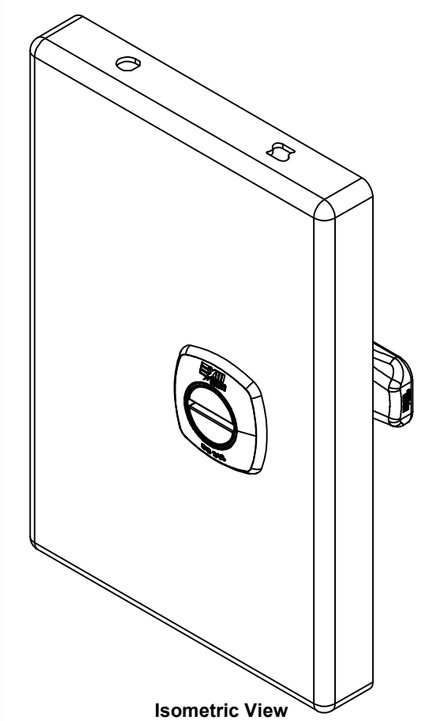

Isometric View

Tél: (450) 979-4373
Fax: (450) 979-4626
www.exmweb.com

Flatness
Aplatissement
Max 3.0mm

Projection

Customer Client		Date	
Drawn By Dessiné Par	BoxCad: BoxCad	Date	18-Nov-14
Material Matière	16 Ga Stainless Steel 304 (1.4mm)		
Color Couleur	Asa-61 Grey	Finish Fini	Smooth
Description	5412ESSMP 6" x 4" Cover	Detail Rev.	
Part Number Numéro Pièce	**5412ESSMP060404C**	Rev. **0**	10 / 10

Parts List

Qty	Part Number	Rev	Description
1	5412ESSMP060404G	0	5412ESSMP 6" x 4" Gasket
1	880 SCQ4-SLSS6	7	5412 ESS 1/4 Turn Lock
1	STK-Q-08500	4	Stainless Steel Standoff M6 x 10mm
1	STK-P-02400S	0	Powder Paint (Asa-61 Grey / Smooth)
1	5412ESSMP060404C-P	0	5412ESSMP 6" x 4" Cover Part
2	STK-A-33038	3	5412 ESSMCH - Stainless Steel Hinge

This drawing is confidential and must not be reproduced or used without the consent of EXM

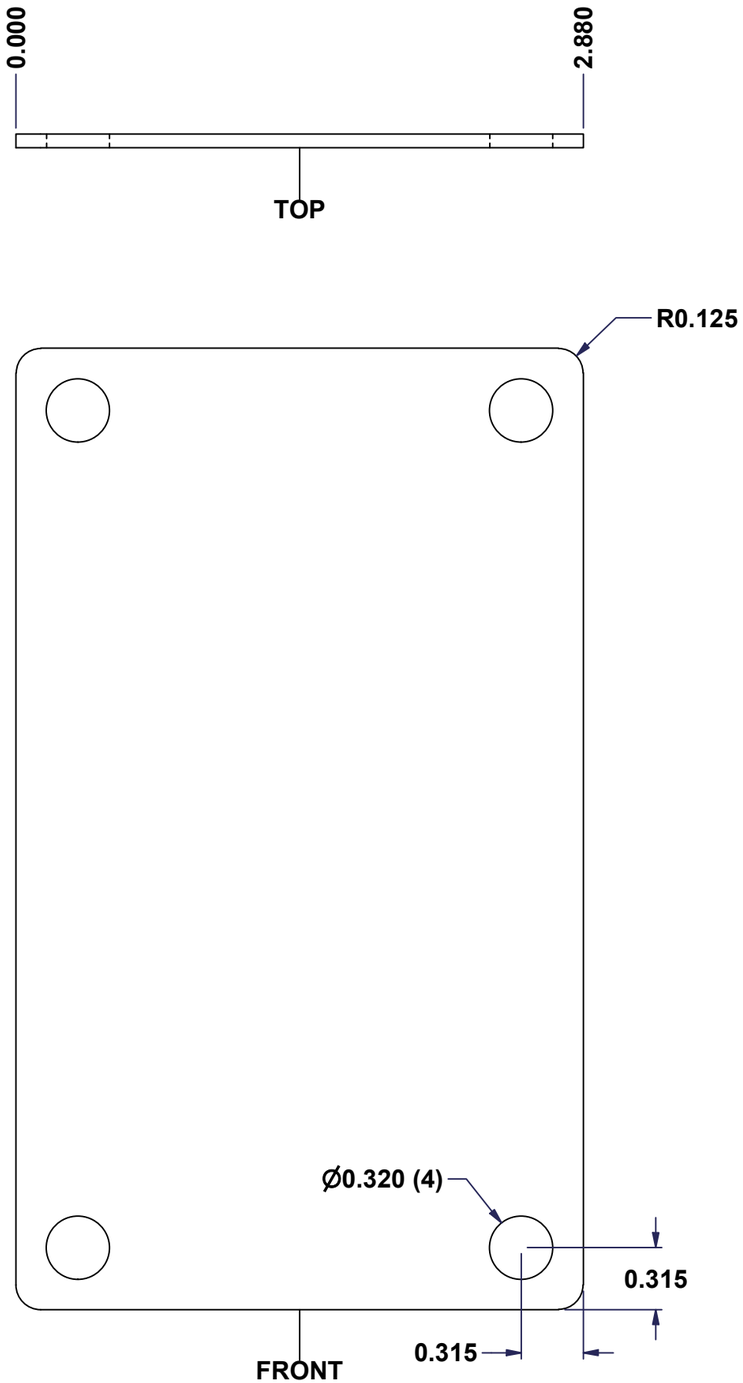

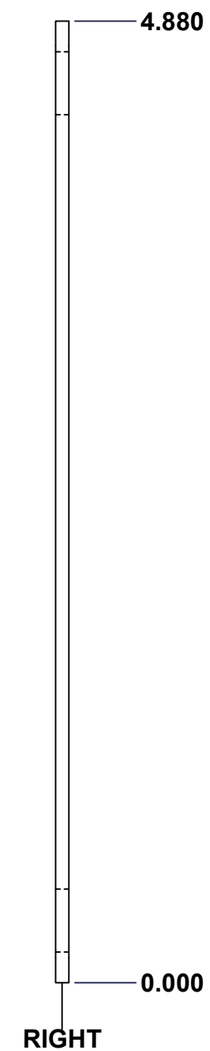

SEE BILL OF MATERIAL ON LAST PAGE

No.	Revisions	Date	By/Par

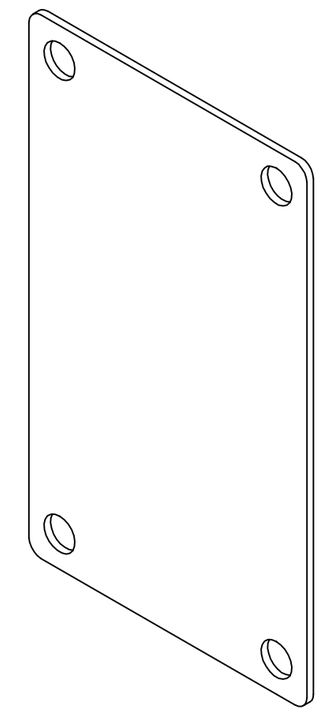

Isometric View

Ce dessin est confidentiel et ne doit pas être reproduit ou utilisé sans le consentement de EXM

Tél: (450) 979-4373
Fax: (450) 979-4626
www.exmweb.com

Flatness / Aplatissement: Max 3.0mm

Projection

Customer / Client		Date	
Drawn By / Dessiné Par	BoxCad	Date	23-Jan-07
Material / Matière	14 Ga Galvanized (1.7mm)		
Color / Couleur	Unpainted	Finish / Fini	Galvanized
Description	880 SP0604G - Inner Panel	Detail Rev.	
Part Number / Numéro Pièce	**880 SP0604G**	Rev. **0**	1 / 2

Tolerance ±1/32" unless otherwise specified

C:\Vault_Workspace\Inventor_Dwg\Inv-8\880SP\880SP0604G.idw

Tolérance ±1/32" sauf spécification contraire

This drawing is confidential and must not be reproduced or used without the consent of EXM

Ce dessin est confidentiel et ne doit pas être reproduit ou utilisé sans le consentement de EXM

No.	Revisions	Date	By/Par

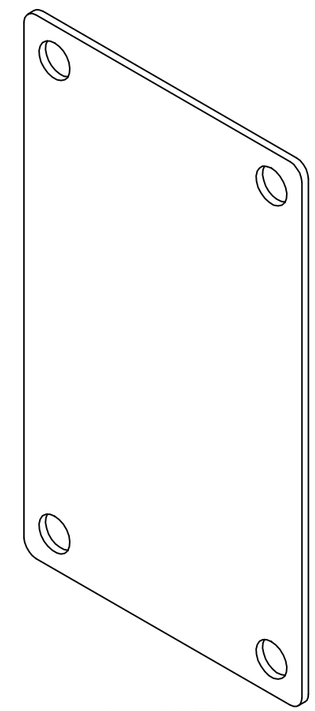

Isometric View

Tél: (450) 979-4373
Fax: (450) 979-4626
www.exmweb.com

Flatness
Aplatissement
Max 3.0mm

Projection

Customer Client		Date	
Drawn By Dessiné Par	BoxCad	Date	23-Jan-07
Material Matière	14 Ga Galvanized (1.7mm)		
Color Couleur	Unpainted	Finish Fini	Galvanized
Description 880 SP0604G - Inner Panel		Detail Rev.	
Part Number Numéro Pièce **880 SP0604G**		Rev. **0**	2 / 2

Qty	Part Number	Rev	Description
1	880 SP0604G-P	0	880 SP0604G - Inner Panel Part

Parts List